George W. Rocktlein Jr.

ELEMENTARY
MACHINE DRAWING AND DESIGN

McGraw-Hill Book Co. Inc.

PUBLISHERS OF BOOKS FOR

Coal Age ▿ Electric Railway Journal
Electrical World ▿ Engineering News-Record
American Machinist ▿ The Contractor
Engineering & Mining Journal ▿ Power
Metallurgical & Chemical Engineering
Electrical Merchandising

ELEMENTARY MACHINE DRAWING AND DESIGN

BY

WILLIAM C. MARSHALL, M.E., C.E.

Engineer Remington Arms Union Metallic Cartridge Co., Bridgeport Works;
Formerly Professor of Machine Design and Descriptive Geometry in
the Sheffield Scientific School of Yale University
Member A. S. M. E., Member S. A. E., Member S. P. E. E.

FIRST EDITION

EIGHTH IMPRESSION

McGRAW-HILL BOOK COMPANY, INC.
239 WEST 39TH STREET. NEW YORK

LONDON: HILL PUBLISHING CO., LTD.
6 & 8 BOUVERIE ST., E.C.

1912

Copyright, 1912, by the
McGraw-Hill Book Company

PREFACE

THE following pages have been arranged for students in engineering who have had a previous course in orthographic projection, but have not yet become acquainted with simple machine elements. A knowledge of mechanics of materials is not necessary for making the calculations nor is it *necessary* to have studied mechanics or mechanism. The course as outlined is not for "home study" without an instructor. Short talks at the blackboard are recommended as being of value in presenting concisely the most important facts in each lesson. Detailed instructions are omitted in many cases to give the instructor an opportunity to vary the assignments to suit individual students.

The time required for the drawing and calculations covering nearly all of the matter in these pages will be about 180 to 200 hours. The test questions have been taken from test and examination papers given by the author to classes for the last ten years and offer no great difficulty to students who have studied the preceding pages.

W. C. MARSHALL.

NEW HAVEN, CONN., May, 1912.

CONTENTS

PAGE

List of Tools Required 8
Directions for Individual Plates at End of Each Chapter .....
Tests and Examination Papers 84, 117, 118, 171, 172, 242, 267
Metric Conversion Table 2
Logarithmic Tables 3
Test Questions 291–313
Index 315

CHAPTER

I. Working Drawings 21
II. Fastenings, Rivets 45
III. Pipes and Pipe Fittings 54
IV. Screw Threads and Springs 67
V. Fastenings (Screws and Bolts) 79
VI. Keys and Cotters 98
VII. Shafting and Shaft Couplings 104
VIII. Stuffing Boxes 112
IX. Shaft Bearings, Journals, Hangers 119
X. Pistons and Piston Rods 150
XI. Crossheads 161
XII. Connecting Rods 173
XIII. Engine Cranks and Eccentrics 189
XIV. Pulleys and Belting 199
XV. Spur Gearing 215
XVI. Bevel Gearing 244
XVII. Worm Gearing 258
XVIII. Valves, Cocks, etc 268

TABLES

		PAGE
	USEFUL INFORMATION—DECIMAL EQUIVALENTS	1
1.	BOLT AND CAP SCREW HEADS AND BOLT STRENGTH	9
2.	INTERNATIONAL AND METRIC SYSTEM	10
3.	COMPARATIVE AREAS AT ROOT OF VARIOUS SYSTEMS OF THREAD	11
4.	DIMENSIONS OF ROLLED BEAMS	12
5.	FLANGE UNIONS	61
6.	FRICTION OF WATER IN PIPES	63
7.	FRICTION OF WATER IN ELBOWS	64
8.	SIZES OF NIPPLES, COUPLINGS, CAPS, ETC	13
9.	STANDARD W. I. PIPE DIMENSIONS	14
10.	OIL CUPS	16
11.	STANDARD STEAM FLANGES	15
12.	SPLIT PINS	16
13.	TAPER PINS	16
14.	A. L. A. M. BOLTS AND NUTS	17
15.	WOODRUFF KEYS	18
15*b*.	WING NUTS	88
16.	BEARING PRESSURES FOR BEARINGS	19
17.	COEFFICIENTS OF FRICTION	19
18.	WEIGHT OF SUBSTANCES	20
19.	STRENGTH OF MATERIALS	20
20.	FACTORS OF SAFETY	20

USEFUL INFORMATION

Area of surface between a circular arc and its chord is approximately $\frac{2}{3}$ the circumscribed rectangle.

Vol. of frustum of cone or pyr. when axis is perp. to bases is $V = (\text{sum of base areas} + \sqrt{\text{product of base areas}}) \times \frac{1}{3}$ height of frustum.

Vol. of sphere $= D^3 \times .5236$.

A gallon = 231 cu.in. A cubic foot = 7.48 gals.

A gallon of water at 39.2° F. weighs 8.3389 lbs.

A cubic foot of water at 62° F. weighs 62.355 lbs.

A cubic foot of water at 212° F. weighs 59.833 lbs.

A column of water 1 ft. high at 39.2° F. exerts a pressure of .4335 lb. per square inch.

A column of water 2.307 ft. high at 39.2° F. exerts a pressure of 1 lb. per square inch.

1 atmosphere = 14.7 lbs. pressure per square inch = 29.922 ins. of mercury = 33.9 ft. of water.

DECIMAL EQUIVALENTS

Decimals.	32ds.	16ths.		Decimals.	32ds.	16ths.	
.03125	$\frac{1}{32}$			.53125	$\frac{17}{32}$		
.0625		$\frac{1}{16}$		.5625		$\frac{9}{16}$	
.09375	$\frac{3}{32}$			.59375	$\frac{19}{32}$		
.125			$\frac{1}{8}$	.625			$\frac{5}{8}$
.15625	$\frac{5}{32}$			.65625	$\frac{21}{32}$		
.1875		$\frac{3}{16}$		.6875		$\frac{11}{16}$	
.21875	$\frac{7}{32}$			.71875	$\frac{23}{32}$		
.25			$\frac{1}{4}$	.75			$\frac{3}{4}$
.28125	$\frac{9}{32}$			.78125	$\frac{25}{32}$		
.3125		$\frac{5}{16}$		.8125		$\frac{13}{16}$	
.34375	$\frac{11}{32}$			.84375	$\frac{27}{32}$		
.375			$\frac{3}{8}$	.875			$\frac{7}{8}$
.40625	$\frac{13}{32}$			.90625	$\frac{29}{32}$		
.4375		$\frac{7}{16}$		.9375		$\frac{15}{16}$	
.46875	$\frac{15}{32}$			.96875	$\frac{31}{32}$		
.5			$\frac{1}{2}$	1.00			

METRIC CONVERSION TABLE

Millimeters × .03937 = inches.
Millimeters ÷ 25.4 = inches.
Centimeters × .3937 = inches.
Centimeters ÷ 2.54 = inches.
Meters × 39.37 = inches. (Act Congress.)
Meters × 3.281 = feet.
Meters × 1.094 = yards.
Kilometers × .621 = miles.
Kilometers ÷ 1.6093 = miles.
Kilometers × 3280.8693 = feet.
Square millimeters × .00155 = square inches.
Square millimeters ÷ 645.1 = square inches.
Square centimeters × .155 = square inches.
Square centimeters ÷ 6.451 = square inches.
Square meters × 10.764 = square feet.
Square kilometers × 247.1 = acres.
Hectare × 2.471 = acres.
Cubic centimeters ÷ 16.383 = cubic inches.
Cubic centimeters ÷ 3.69 = fluid drams (U.S.P.).
Cubic centimeters ÷ 29.57 = fluid ounces (U.S.P.).
Cubic meters × 35.315 = cubic feet.
Cubic meters × 1.308 = cubic yards.
Cubic meters × 264.2 = gallons (231 cu.in.).
Liters × 61.022 = cubic inches. (Act Congress.).
Liters × 33.84 = fluid ounces (U.S.P.).
Liters × .2642 = gallons (231 cu.in.).
Liters ÷ 3.78 = gallons (231 cu.in.).
Liters ÷ 28.316 = cubic feet.
Hectoliters × 3.531 = cubic feet.
Hectoliters × 2.84 = bushels (2150.42 cu.in.).
Hectoliters × .131 = cubic yards.
Hectoliters ÷ 26.42 = gallons (231 cu.in.).
Grammes × 15.432 = grains. (Act Congress.)
Grammes ÷ 981 = dynes.
Grammes (water) ÷ 29.57 = fluid ounces.
Grammes ÷ 28.35 = ounces avoirdupois.
Grammes per cubic centimeter ÷ 27.7 = pounds per cubic inch.
Joule × .7373 = foot-pounds.
Kilo-grammes × 2.2046 = pounds.
Kilo-grammes × 35.3 = ounces avoirdupois.
Kilo-grammes per square centimeter × 14.223 = pounds per square inch.
Kilo-gram-meters × 7.233 = foot-pounds.
Kilo-grammes per meter × .672 = pounds per foot.
Kilo-grammes per cubic meter × .062 = pounds per cubic foot.
Tonneau × 1.1023 = tons (2000 lbs.).
Kilo-watts × 1.34 = horse-power.
Watts ÷ 746 = horse-power.
Watts × .7373 = foot-pounds per second.
Calorie × 3.968 = B.T.U.
Cheval vapeur ÷ .9863 = horse-power.
(Centigrade × 1.8) + 32 = degree Fahrenheit.
Franc × .193 = dollars.
Gravity Paris = 980.94 centimeters per second.

TABLE OF LOGARITHMS

N.	L. 0	1	2	3	4	5	6	7	8	9	P. P.		
0	———	0000	3010	4771	6021	6990	7782	8451	9031	9542		**22**	**21**
1	0000	0414	0792	1139	1461	1761	2041	2304	2553	2788	1	2.2	2.1
2	3010	3222	3424	3617	3802	3979	4150	4314	4472	4624	2	4.4	4.2
3	4771	4914	5051	5185	5315	5441	5563	5682	5798	5911	3	6.6	6.3
4	6021	6128	6232	6335	6435	6532	6628	6721	6812	6902	4	8.8	8.4
5	6990	7076	7160	7243	7324	7404	7482	7559	7634	7709	5	11.0	10.5
6	7782	7853	7924	7993	8062	8129	8195	8261	8325	8388	6	13.2	12.6
7	8451	8513	8573	8633	8692	8751	8808	8865	8921	8976	7	15.4	14.7
8	9031	9085	9138	9191	9243	9294	9345	9395	9445	9494	8	17.6	16.8
9	9542	9590	9638	9685	9731	9777	9823	9868	9912	9956	9	19.8	18.9
10	0000	0043	0086	0128	0170	0212	0253	0294	0334	0374		**20**	**19**
11	0414	0453	0492	0531	0569	0607	0645	0682	0719	0755	1	2.0	1.9
12	0792	0828	0864	0899	0934	0969	1004	1038	1072	1106	2	4.0	3.8
13	1139	1173	1206	1239	1271	1303	1335	1367	1399	1430	3	6.0	5.7
14	1461	1492	1523	1553	1584	1614	1644	1673	1703	1732	4	8.0	7.6
15	1761	1790	1818	1847	1875	1903	1931	1959	1987	2014	5	10.0	9.5
16	2041	2068	2095	2122	2148	2175	2201	2227	2253	2279	6	12.0	11.4
17	2304	2330	2355	2380	2405	2430	2455	2480	2504	2529	7	14.0	13.3
18	2553	2577	2601	2625	2648	2672	2695	2718	2742	2765	8	16.0	15.2
19	2788	2810	2833	2856	2878	2900	2923	2945	2967	2989	9	18.0	17.1
20	3010	3032	3054	3075	3096	3118	3139	3160	3181	3201		**18**	**17**
21	3222	3243	3263	3284	3304	3324	3345	3365	3385	3404	1	1.8	1.7
22	3424	3444	3464	3483	3502	3522	3541	3560	3579	3598	2	3.6	3.4
23	3617	3636	3655	3674	3692	3711	3729	3747	3766	3784	3	5.4	5.1
24	3802	3820	3838	3856	3874	3892	3909	3927	3945	3962	4	7.2	6.8
25	3979	3997	4014	4031	4048	4065	4082	4099	4116	4133	5	9.0	8.5
26	4150	4166	4183	4200	4216	4232	4249	4265	4281	4298	6	10.8	10.2
27	4314	4330	4346	4362	4378	4393	4409	4425	4440	4456	7	12.6	11.9
28	4472	4487	4502	4518	4533	4548	4564	4579	4594	4609	8	14.4	13.6
29	4624	4639	4654	4669	4683	4698	4713	4728	4742	4757	9	16.2	15.3
30	4771	4786	4800	4814	4829	4843	4857	4871	4886	4900		**16**	**15**
31	4914	4928	4942	4955	4969	4983	4997	5011	5024	5038	1	1.6	1.5
32	5051	5065	5079	5092	5105	5119	5132	5145	5159	5172	2	3.2	3.0
33	5185	5198	5211	5224	5237	5250	5263	5276	5289	5302	3	4.8	4.5
34	5315	5328	5340	5353	5366	5378	5391	5403	5416	5428	4	6.4	6.0
35	5441	5453	5465	5478	5490	5502	5514	5527	5539	5551	5	8.0	7.5
36	5563	5575	5587	5599	5611	5623	5635	5647	5658	5670	6	9.6	9.0
37	5682	5694	5705	5717	5729	5740	5752	5763	5775	5786	7	11.2	10.5
38	5798	5809	5821	5832	5843	5855	5866	5877	5888	5900	8	12.8	12.0
39	5911	5922	5933	5944	5955	5966	5977	5988	5699	6010	9	14.4	13.5
40	6021	6031	6042	6053	6064	6075	6085	6096	6107	6117		**14**	**13**
N.	L. 0	1	2	3	4	5	6	7	8	9	1	1.4	1.3
											2	2.8	2.6
											3	4.2	3.9
											4	5.6	5.2
											5	7.0	6.5
											6	8.4	7.8
											7	9.8	9.1
											8	11.2	10.4
											9	12.6	11.7
												12	**11**
											1	1.2	1.1
											2	2.4	2.2
											3	3.6	3.3
											4	4.8	4.4
											5	6.0	5.5
											6	7.2	6.6
											7	8.4	7.7
											8	9.6	8.8
											9	10.8	9.9

Log $\pi = 0.4971$ $\quad \pi^2 = 9.8696$

Log $\pi^2 = 0.9943$ $\quad 2\pi = 6.2831$

Log $2\pi = 0.7981$ $\quad \sqrt{\pi} = 1.7724$

Log $\sqrt{\pi} = 0.2485$

N.	L. 0	1	2	3	4	5	6	7	8	9
40	6021	6031	6042	6053	6064	6075	6085	6096	6107	6117
41	6128	6138	6149	6160	6170	6180	6191	6201	6212	6222
42	6232	6243	6253	6263	6274	6284	6294	6304	6314	6325
43	6335	6345	6355	6365	6375	6385	6395	6405	6415	6425
44	6435	6444	6454	6464	6474	6484	6493	6503	6513	6522
45	6532	6542	6551	6561	6571	6580	6590	6599	6609	6618
46	6628	6637	6646	6656	6665	6675	6684	6693	6702	6712
47	6721	6730	6739	6749	6758	6767	6776	6785	6794	6803
48	6812	6821	6830	6839	6848	6857	6866	6875	6884	6893
49	6902	6911	6920	6928	6937	6946	6955	6964	6972	6981
50	6990	6998	7007	7016	7024	7033	7042	7050	7059	7067
51	7076	7084	7093	7101	7110	7118	7126	7135	7143	7152
52	7160	7168	7177	7185	7193	7202	7210	7218	7226	7235
53	7243	7251	7259	7267	7275	7284	7292	7300	7308	7316
54	7324	7332	7340	7348	7356	7364	7372	7380	7388	7396
55	7404	7412	7419	7427	7435	7443	7451	7459	7466	7474
56	7482	7490	7497	7505	7513	7520	7528	7536	7543	7551
57	7559	7566	7574	7582	7589	7597	7604	7612	7619	7627
58	7634	7642	7649	7657	7664	7672	7679	7686	7694	7701
59	7709	7716	7723	7731	7738	7745	7752	7760	7767	7774
60	7782	7789	7796	7803	7810	7818	7825	7832	7839	7846
61	7853	7860	7868	7875	7882	7889	7896	7903	7910	7917
62	7924	7931	7938	7945	7952	7959	7966	7973	7980	7987
63	7993	8000	8007	8014	8021	8028	8035	8041	8048	8055
64	8062	8069	8075	8082	8089	8096	8102	8109	8116	8122
65	8129	8136	8142	8149	8156	8162	8169	8176	8182	8189
66	8195	8202	8209	8215	8222	8228	8235	8241	8248	8254
67	8261	8267	8274	8280	8287	8293	8299	8306	8312	8319
68	8325	8331	8338	8344	8351	8357	8363	8370	8376	8382
69	8388	8395	8401	8407	8414	8420	8426	8432	8439	8445
70	8451	8457	8463	8470	8476	8482	8488	8494	8500	8506
71	8513	8519	8525	8531	8537	8543	8549	8555	8561	8567
72	8573	8579	8585	8591	8597	8603	8609	8615	8621	8627
73	8633	8639	8645	8651	8657	8663	8669	8675	8681	8686
74	8692	8698	8704	8710	8716	8722	8727	8733	8739	8745
75	8751	8756	8762	8768	8774	8779	8785	8791	8797	8802
76	8808	8814	8820	8825	8831	8837	8842	8848	8854	8859
77	8865	8871	8876	8882	8887	8893	8899	8904	8910	8915
78	8921	8927	8932	8938	8943	8949	8954	8960	8965	8971
79	8976	8982	8987	8993	8998	9004	9009	9015	9020	9025
80	9031	9036	9042	9047	9053	9058	9063	9069	9074	9079
N.	L. 0	1	2	3	4	5	6	7	8	9

P. P.

	9	8
1	0.9	0.8
2	1.8	1.6
3	2.7	2.4
4	3.6	3.2
5	4.5	4.0
6	5.4	4.8
7	6.3	5.6
8	7.2	6.4
9	8.1	7.2

	9
1	0.9
2	1.8
2	2.7
4	3.6
5	4.5
6	5.4
7	6.3
8	7.2
9	8.1

	8
1	0.8
2	1.6
3	2.4
4	3.2
5	4.0
6	4.8
7	5.6
8	6.4
9	7.2

	7
1	0.7
2	1.4
3	2.1
4	2.8
5	3.5
6	4.2
7	4.9
8	5.6
9	6.3

	6
1	0.6
2	1.2
3	1.8
4	2.4
5	3.0
6	3.6
7	4.2
8	4.8
9	5.4

N.	L. 0	1	2	3	4	5	6	7	8	9
80	9031	9036	9042	9047	9053	9058	9063	9069	9074	9079
81	9085	9090	9096	9101	9106	9112	9117	9122	9128	9133
82	9138	9143	9149	9154	9159	9165	9170	9175	9180	9186
83	9191	9196	9201	9206	9212	9217	9222	9227	9232	8238
84	9243	9248	9253	9258	9263	9269	9274	9279	9284	9289
85	9294	9299	9304	9309	9315	9320	9325	9330	9335	9340
86	9345	9350	9355	9360	9365	9370	9375	9380	9385	9390
87	9395	9400	9405	9410	9415	9420	9425	9430	9435	9440
88	9445	9450	9455	9460	9465	9469	9474	9479	9484	9489
89	9494	9499	9504	9509	9513	9518	9523	9528	9533	9538
90	9542	9547	9552	9557	9562	9566	9571	9576	9581	9586
91	9590	9595	9600	9605	9609	9614	9619	9624	9628	9633
92	9638	9643	9647	9652	9657	9661	9666	9671	9675	9680
93	9685	9689	9694	9699	9703	9708	9713	9717	9722	9727
94	9731	9736	9741	9745	9750	9754	9759	9763	9768	9773
95	9777	9782	9786	9791	9795	9800	9805	9809	9814	9818
96	9823	9827	9832	9836	9841	9845	9850	9854	9859	9863
97	9868	9872	9877	9881	9886	9890	9894	9899	9903	9908
98	9912	9917	9921	9926	9930	9934	9939	9943	9948	9952
99	9956	9961	9965	9969	9974	9978	9983	9987	9991	9996
100	0000	0004	0009	0013	0017	0022	0026	0030	0035	0039
101	0043	0048	0052	0056	0060	0065	0069	0073	0077	0082
102	0086	0090	0095	0099	0103	0107	0111	0116	0120	0124
103	0128	0133	0137	0141	0145	0149	0154	0158	0162	0166
104	0170	0175	0179	0183	0187	0191	0195	0199	0204	0208
105	0212	0216	0220	0224	0228	0233	0237	0241	0245	0249
106	0253	0257	0261	0265	0269	0273	0278	0282	0286	0290
107	0294	0298	0302	0306	0310	0314	0318	0322	0326	0330
108	0334	0338	0342	0346	0350	0354	0358	0362	0366	0370
109	0374	0378	0382	0386	0390	0394	0398	0402	0406	0410
110	0414	0418	0422	0426	0430	0434	0438	0441	0445	0449
111	0453	0457	0461	0465	0469	0473	0477	0481	0484	0488
112	0492	0496	0500	0504	0508	0512	0515	0519	0523	0527
113	0531	0535	0538	0542	0546	0550	0554	0558	0561	0565
114	0569	0573	0577	0580	0584	0588	0592	0596	0599	0603
115	0607	0611	0615	0618	0622	0626	0630	0633	0637	0641
116	0645	0648	0652	0656	0660	0663	0667	0671	0674	0678
117	0682	0686	0689	0693	0697	0700	0704	0708	0711	0715
118	0719	0722	0726	0730	0734	0737	0741	0745	0748	0752
119	0755	0759	0763	0766	0770	0774	0777	0781	0785	0788
120	0792	0795	0799	0803	0806	0810	0813	0817	0821	0824
N.	L. 0	1	2	3	4	5	6	7	8	9

P. P.

	5
1	0.5
2	1.0
3	1.5
4	2.0
5	2.5
6	3.0
7	3.5
8	4.0
9	4.5

	4
1	0.4
2	0.8
3	1.2
4	1.6
5	2.0
6	2.4
7	2.8
8	3.2
9	3.6

	5
1	0.5
2	1.0
3	1.5
4	2.0
5	2.5
6	3.0
7	3.5
8	4.0
9	4.5

N.	L. 0	1	2	3	4	5	6	7	8	9
120	0792	0795	0799	0803	0806	0810	0813	0817	0821	0824
121	0828	0831	0835	0839	0842	0846	0849	0853	0856	0860
122	0864	0867	0871	0874	0878	0881	0885	0888	0892	0896
123	0899	0903	0906	0910	0913	0917	0920	0924	0927	0931
124	0934	0938	0941	0945	0948	0952	0955	0959	0962	0966
125	0969	0973	0976	0980	0983	0986	0990	0993	0997	1000
126	1004	1007	1011	1014	1017	1021	1024	1028	1031	1035
127	1038	1041	1045	1048	1052	1055	1059	1062	1065	1069
128	1072	1075	1079	1082	1086	1089	1093	1096	1099	1103
129	1106	1109	1113	1116	1119	1123	1126	1129	1133	1136
130	1139	1143	1146	1149	1153	1156	1159	1163	1166	1169
131	1173	1176	1179	1183	1186	1189	1193	1196	1199	1202
132	1206	1209	1212	1216	1219	1222	1225	1229	1232	1235
133	1239	1242	1245	1248	1252	1255	1258	1261	1265	1268
134	1271	1274	1278	1281	1284	1287	1290	1294	1297	1300
135	1303	1307	1310	1313	1316	1319	1323	1326	1329	1332
136	1335	1339	1342	1345	1348	1351	1355	1358	1361	1364
137	1367	1370	1374	1377	1380	1383	1386	1389	1392	1396
138	1399	1402	1405	1408	1411	1414	1418	1421	1424	1427
139	1430	1433	1436	1440	1443	1446	1449	1452	1455	1458
140	1461	1464	1467	1471	1474	1477	1480	1483	1486	1489
141	1492	1495	1498	1501	1504	1508	1511	1514	1517	1520
142	1523	1526	1529	1532	1535	1538	1541	1544	1547	1550
143	1553	1556	1559	1562	1565	1569	1572	1575	1578	1581
144	1584	1587	1590	1593	1596	1599	1602	1605	1608	1611
145	1614	1617	1620	1623	1626	1629	1632	1635	1638	1641
146	1644	1647	1649	1652	1655	1658	1661	1664	1667	1670
147	1673	1676	1679	1682	1685	1688	1691	1694	1697	1700
148	1703	1706	1708	1711	1714	1717	1720	1723	1726	1729
149	1732	1735	1738	1741	1744	1746	1749	1752	1755	1758
150	1761	1764	1767	1770	1772	1775	1778	1781	1784	1787
151	1790	1793	1796	1798	1801	1804	1807	1810	1813	1816
152	1818	1821	1824	1827	1830	1833	1836	1838	1841	1844
153	1847	1850	1853	1855	1858	1861	1864	1867	1870	1872
154	1875	1878	1881	1884	1886	1889	1892	1895	1898	1901
155	1903	1906	1909	1912	1915	1917	1920	1923	1926	1928
156	1931	1934	1937	1940	1942	1945	1948	1951	1953	1956
157	1959	1962	1965	1967	1970	1973	1976	1978	1981	1984
158	1987	1989	1992	1995	1998	2000	2003	2006	2009	2011
159	2014	2017	2019	2022	2025	2028	2030	2033	2036	2038
160	2041	2044	2047	2049	2052	2055	2057	2060	2063	2066
N.	L. 0	1	2	3	4	5	6	7	8	9

P. P.	4	3	2
1	0.4	0.3	0.2
2	0.8	0.6	0.4
3	1.2	0.9	0.6
4	1.6	1.2	0.8
5	2.0	1.5	1.0
6	2.4	1.8	1.2
7	2.8	2.1	1.4
8	3.2	2.4	1.6
9	3.6	2.7	1.8

N.	L. 0	1	2	3	4	5	6	7	8	9
160	2041	2044	2047	2049	2052	2055	2057	2060	2063	2066
161	2068	2071	2074	2076	2079	2082	2084	2087	2090	2092
162	2095	2098	2101	2103	2106	2109	2111	2114	2117	2119
163	2122	2125	2127	2130	2133	2135	2138	2140	2143	2146
164	2148	2151	2154	2156	2159	2162	2164	2167	2170	2172
165	2175	2177	2180	2183	2185	2188	2191	2193	2196	2198
166	2201	2204	2206	2209	2212	2214	2217	2219	2222	2225
167	2227	2230	2232	2235	2238	2240	2243	2245	2248	2251
168	2253	2256	2258	2261	2263	2266	2269	2271	2274	2276
169	2279	2281	2284	2287	2289	2292	2294	2297	2299	2302
170	2304	2307	2310	2312	2315	2317	2320	2322	2325	2327
171	2330	2333	2335	2338	2340	2343	2345	2348	2350	2353
172	2355	2358	2360	2363	2365	2368	2370	2373	2375	2378
173	2380	2383	2385	2388	2390	2393	2395	2398	2400	2403
174	2405	2408	2410	2413	2415	2418	2420	2423	2425	2428
175	2430	2433	2435	2438	2440	2443	2445	2448	2450	2453
176	2455	2458	2460	2463	2465	2467	2470	2472	2475	2477
177	2480	2482	2485	2487	2490	2492	2494	2497	2499	2502
178	2504	2507	2509	2512	2514	2516	2519	2521	2524	2526
179	2529	2531	2533	2536	2538	2541	2543	2545	2548	2550
180	2553	2555	2558	2560	2562	2565	2567	2570	2572	2574
181	2577	2579	2582	2584	2586	2589	2591	2594	2596	2598
182	2601	2603	2605	2608	2610	2623	2615	2617	2610	2622
183	2625	2627	2629	2632	2634	2636	2639	2641	2643	2646
184	2648	2651	2653	2655	2658	2660	2662	2665	2667	2669
185	2672	2674	2676	2679	2681	2683	2686	2688	2690	2693
186	2695	2697	2700	2702	2704	2707	2709	2711	2714	2716
187	2718	2721	2723	2725	2728	2730	2732	2735	2737	2739
188	2742	2744	2746	2749	2751	2753	2755	2758	2760	2762
189	2765	2767	2769	2772	2774	2776	2778	2781	2783	2785
190	2788	2790	2792	2794	2797	2799	2801	2804	2806	2808
191	2810	2813	2815	2817	2819	2822	2824	2826	2828	2831
192	2833	2835	2838	2840	2842	2844	2847	2849	2851	2853
193	2856	2858	2860	2862	2865	2867	2869	2871	2874	2876
194	2878	2880	2883	2885	2887	2889	2891	2894	2896	2898
195	2900	2903	2905	2907	2909	2911	2914	2916	2918	2920
196	2923	2925	2927	2929	2931	2934	2936	2938	2940	2942
197	2945	2947	2949	2951	2953	2956	2958	2960	2962	2964
198	2967	2969	2971	2973	2975	2978	2980	2982	2984	2986
199	2989	2991	2993	2965	2997	2999	3002	3004	3006	3008
200	3010	3012	3015	3017	3019	3021	3023	3025	3028	3030
N.	L. 0	1	2	3	4	5	6	7	8	9

P. P.

	3
1	0.3
2	0.6
3	0.9
4	1.2
5	1.5
6	1.8
7	2.1
8	2.4
9	2.7

	2
1	0.2
2	0.4
3	0.6
4	0.8
5	1.0
6	1.2
7	1.4
8	1.6
9	1.8

LIST OF TOOLS REQUIRED

T-square, 24″ blade (no more or no less).
60° triangle, 11″ side, celluloid preferred.
45° triangle, 9″ side, celluloid preferred.
Kelsey triangle 30°–60°–45° with knob and erasing slot or *Zange* triangle.
Set of drawing instruments, comprising 6″ compasses, with pencil, pen, lengthening bar, dividers (hair spring or bow spacing), bow pencil, bow pen, ruling pen (Alteneder or Riefler preferred).
Curved rulers (1 large and 1 small).
Pencil eraser (Emerald, or any hard make, not a soft one).
Ink eraser (Faber's typewriter).
12″ triangular *architects'* scale or flat scale divided into 16ths.
Art gum or sponge rubber (for cleaning only).
1–4H, 1–6H drawing pencil, or a holder with leads.
4H leads for compasses.
6 thumb tacks.
Cake of magnesia, or chalk.
1 bottle of black (waterproof) drawing ink with filler on cork.
1 pen holder of good size around.
1 piece of cotton cloth about the size of a handkerchief, for wiping off drawings.
1 pencil sharpener (sandpaper, or flat file).
3 writing pens (Gillott's 404, Lady Falcon, ball pointed).
1 protractor (Penfield's). 1 pen wiper. 1 blotter.
1 soapstone metalworkers' crayon (flat).
1 loose leaf note book for calculations 9110 I–P.
1 sheet, 6″×6″, of celluloid .005 thick, dull on both sides (used for an erasing shield).
1 slide rule (K and E, or Faber), 10″ long.
22 sheets $\frac{1}{2}$ Imperial size drawing paper (22″×15″), (size No. 3). buff or K and E Normal, and 15 sheets (size No. 1), (8″×10$\frac{1}{2}$″), with holes punched for above note book.

The student's name or initials ought to be placed on each article.

The following instruments, while not required, will be found very useful:

Horn center, needle prick point.
Triangular scale guard. Thumb tack lifter.
Arkansas oil stone 2″×$\frac{1}{2}$″×$\frac{1}{16}$″ (for sharpening pens).
Section liner (G and J type), the simpler the better.

TABLE I

Diameter of Bolt.	Sizes of Bolt and Cap Screw Heads and Nuts.															Strength of Bolts.					
	U. S. Standard.				Manufacturers Stand. Head.		Cap Screws.								Threads per Inch.	Area at Root.	Diameter at Root.	Diameter of Body.	Tensile Strength at Root, 1000 Lbs. per Sq.in.	Shearing Strength of Body, 1000 Lbs. per Sq.in.	Area of Body.
	Nut.		Head.				Hex. Head.		Sq. Head.		Fill. Head.		Flat Head. Diam.	Button Head. Diam.							
	Width.	Depth.	Width.	Depth.	Width.	Depth.	Width.	Depth.	Width.	Depth.	Diam.	Depth.									
″	″	″	″	″	″	″	″	″	″	″	″	″	″	″		sq.in.	″	″	lbs.	lbs.	sq.in.
1/8	..	..	..	..	..	..	..	..	..	..	3/16	1/8	1/4	7/32	40	....	....	.125	....	....	.0122
3/16	..	..	..	..	..	..	..	..	..	..	1/4	3/16	3/8	5/16	30	....	....	.1875	....	....	.0276
1/4	1/2	1/4	1/2	1/4	3/8	3/16	7/16	1/4	3/8	1/4	3/8	1/4	15/32	7/16	20	.026	.185	.25	26.9	49.1	.0491
5/16	19/32	5/16	19/32	19/64	15/32	15/64	1/2	5/16	7/16	5/16	7/16	5/16	5/8	9/16	18	.045	.24	.3125	45.4	76.7	.0767
3/8	11/16	3/8	11/16	11/32	9/16	9/32	9/16	3/8	1/2	3/8	9/16	3/8	3/4	5/8	16	.067	.294	.375	67.8	110.4	.1104
7/16	25/32	7/16	25/32	25/64	21/32	21/64	5/8	7/16	9/16	7/16	5/8	7/16	13/16	3/4	14	.093	.345	.4375	93.3	150.3	.1503
1/2	7/8	1/2	7/8	7/16	3/4	3/8	3/4	1/2	5/8	1/2	3/4	1/2	7/8	13/16	13	.125	.400	.50	125.7	196.3	.1963
9/16	31/32	9/16	31/32	31/64	27/32	27/64	13/16	9/16	11/16	9/16	13/16	9/16	1	15/16	12	.162	.454	.5625	162.1	248.5	.2485
5/8	1 1/16	5/8	1 1/16	17/32	15/16	15/32	7/8	5/8	3/4	5/8	7/8	5/8	1 1/8	1	11	.202	.507	.625	201.8	306.8	.3068
3/4	1 1/4	3/4	1 1/4	5/8	1 1/8	9/16	1	3/4	7/8	3/4	1	3/4	1 3/8	1 1/4	10	.302	.620	.75	302	441.8	.4418
7/8	1 7/16	7/8	1 7/16	23/32	1 5/16	21/32	1 1/8	7/8	1 1/8	7/8	1 1/8	7/8	..	..	9	.419	.731	.875	419.3	601.3	.6013
1	1 5/8	1	1 5/8	13/16	1 1/2	3/4	1 1/4	1	1 1/4	1	1 1/4	1	..	..	8	.550	.837	1.0	551	785.4	.7854
1 1/8	1 13/16	1 1/8	1 13/16	29/32	1 11/16	27/32	1 3/8	1 1/8	1 3/8	1 1/8	..	..	..	..	7	.694	.940	1.125	693.1	994.0	.9940
1 1/4	2	1 1/4	2	1	1 7/8	15/16	1 1/2	1 1/4	1 1/2	1 1/4	..	..	..	..	7	.891	1.065	1.25	889.9	1227	1.227
1 3/8	2 3/16	1 3/8	2 3/16	1 3/32	..	..	..	..	1 5/8	1 3/8	..	..	..	..	6	1.057	1.160	1.375	1054	1485	1.485
1 1/2	2 3/8	1 1/2	2 3/8	1 3/16	..	..	..	..	..	..	..	..	..	..	6	1.294	1.284	1.50	1293	1767	1.767
1 5/8	2 9/16	1 5/8	2 9/16	1 9/32	..	..	..	..	..	..	..	..	..	..	5½	1.515	1.389	1.625	1515	2074	2.074
1 3/4	2 3/4	1 3/4	2 3/4	1 3/8	..	..	..	..	..	..	..	..	..	..	5	1.746	1.491	1.75	1744	2405	2.405
1	2	3	4	5	6	7	8	9	10	11	12	13	14	15	16	A	B	C	D	E	F

TABLE 2

INTERNATIONAL SYSTEM

1	2	3	4	5	6	7	8
Diam. of Body in m/m.	Pitch, m/m.	Diam. of Body in m/m.	Pitch, m/m.	Diam. of Body in m/m.	Pitch, m/m.	Diam. of Body in m/m.	Pitch, m/m.
3	0.55	11	1.5	30	3.5	60	5.5
3½	0.55	12	1.75	33	3.5	64	6
4	0.7	14	2	36	4	68	6
5	0.85	16	2	39	4	72	6.5
6	1.0	18	2.5	42	4.5	76	6.5
7	1.0	20	2.5	45	4.5	80	7.0
8	1.25	22	2.5	48	5		
9	1.25	24	3	52	5		
10	1.5	27	3	56	5.5		

METRIC SYSTEM

Diam. of Body, m/m.	Pitch, m/m.	Diam. at Root, m/m.	Diam. of Body. m/m.	Pitch, m/m	Diam. at Root. m/m	Diam. of Body. m/m	Pitch. m/m	Diam. at Root. m/m
3	0.5	2.35	16	2.0	13.40	38	4.0	32.80
4	0.75	3.03	18	2.5	14.75	39	4.0	33.80
5	0.75	4.03	20	2.5	16.75	40	4.0	34.80
6	1.0	4.70	22	2.5	18.75	42	4.5	36.15
7	1.0	5.70	22	3.0	18.10	44	4.5	38.15
8	1.0	6.70	24	3.0	20.10	45	4.5	39.15
8	1.25	6.38	26	3.0	22.10	46	4.5	40.15
9	1.0	7.70	27	3.0	23.10	48	5.0	41.51
9	1.25	7.38	28	3.0	24.10	50	5.0	43.51
10	1.5	8.05	30	3.5	25.45	52	5.0	45.51
11	1.5	9.05	32	3.5	27.45	56	5.5	48.86
12	1.5	10.05	33	3.5	28.45	60	5.5	52.86
12	1.75	9.73	34	3.5	29.45	64	6.0	56.21
14	2.0	11.40	36	4.0	30.80	68	6.0	60.21
						72	6.5	63.56

Table 3

COMPARATIVE AREAS AT ROOT OF VARIOUS SCREW THREAD SYSTEMS

1	2	3	4	5	6	7	8	9	10	11	12	13	14
	V Thread.		U. S. Stand.		A. L. A. M.		Whitworth.		Brit. Stand. Fine Thread.		British Assoc. Screw Threads.		
Diam. of Body *D.*	Area at Root.	Threads per Inch.	Area at Root.	Threads per Inch.	Area at Root.	Trehads per Inch.	Area at Root.	Threads per Inch.	Area at Root.	Threads per Inch.	Number.	Pitch Ins.	Diam. Ins.
$\frac{1}{4}$	.021	20	.026	20	..	28	.027	20	.031	25	0	.039	.236
$\frac{5}{16}$	.037	18	.045	18	..	24	.046	18	.0508	22	1	.035	.209
$\frac{3}{8}$	.055	16	.067	16	..	24	.068	16	.0760	20	2	.032	.185
$\frac{7}{16}$	.076	14	.093	14	..	20	.094	14	.1054	18	3	.029	.161
$\frac{1}{2}$	.099	12	.125	13	..	20	.121	12	.1385	16	4	.026	.142
$\frac{9}{16}$	.139	12	.162	12	..	18	...	12	.1828	16	5	.023	.126
$\frac{5}{8}$	.172	11	.202	11	..	18	.204	11	.2235	14	6	.021	.110
$\frac{11}{16}$	.221	11	...	..	..	16	...	11					
$\frac{3}{4}$	.262	10	.302	10	..	16	.304	10	.3250	12	7	.0189	.098
$\frac{13}{16}$	.322	10	...	..	..	..	...	10					
$\frac{7}{8}$	.371	9	.419	9	..	14	.422	9	.4520	11	8	.0169	.087
$\frac{15}{16}$	.44	9											
1	.479	8	.550	8	..	14	.554	8	.5971	10	9	.0154	.075
$1\frac{1}{8}$	.60	7	.694	7	..	12	.694	7	.7585	9	10	.0138	.067
$1\frac{1}{4}$	.785	7	.891	7	..	12	.894	7	.9637	9	11	.0122	.059
$1\frac{3}{8}$	.928	6	1.057	6	..	12	1.06	6	1.159	8	12	.0110	.051
$1\frac{1}{2}$	1.078	6	1.294	6	..	12	1.30	6	1.41	8	13	.0098	.047
$1\frac{5}{8}$	1.28	5	1.515	$5\frac{1}{2}$	..	..	1.472	5	1.685	8	14	.0091	.039
$1\frac{3}{4}$	1.54	5	1.746	5	..	..	1.753	5	1.928	7	15	.0083	.035
$1\frac{7}{8}$	1.75	$4\frac{1}{2}$	2.051	5	..	..	1.986	..	....	..	16	.0075	.031
2	2.04	$4\frac{1}{2}$	2.302	$4\frac{1}{2}$	..	..	2.311	$4\frac{1}{2}$	2.593	7	17	.0067	.028
$2\frac{1}{8}$	2.38	$4\frac{1}{2}$	...	...	..	..	2.659	..	....	..	18	.0059	.024
$2\frac{1}{4}$	2.74	$4\frac{1}{2}$	3.023	$4\frac{1}{2}$	..	..	2.926	4	3.257	6	19	.0055	.021
$2\frac{3}{8}$	3.12	$4\frac{1}{2}$	...	..	..	..	...	..	....	..	20	.0047	.019
$2\frac{1}{2}$	3.37	4	3.719	4	..	..	3.733	4	4.106	6	21	.0043	.017
$2\frac{5}{8}$	3.77	4	...	..	..	..	...	..	....	..	22	.0039	.015
$2\frac{3}{4}$	4.20	4	4.62	4	..	..	4.464	$3\frac{1}{2}$	5.053	6	23	.0035	.013
$2\frac{7}{8}$	4.66	4	...	..	..	..	...	..	....	..	24	.0031	.011
3	4.9	$3\frac{1}{2}$	5.428	$3\frac{1}{2}$	..	..	5.45	$3\frac{1}{2}$	5.913	5	25	.0028	.010

TABLE 4

DIMENSIONS OF ROLLED BEAM SECTIONS

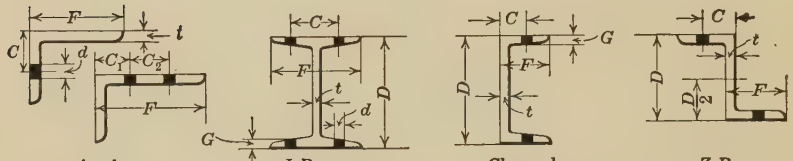

Angles I-Beam Channel Z-Bar

angles

F	t	C	C_1	C_2	G	d max.	Weight per Ft.
2	$\frac{3}{16}$ to $\frac{3}{8}$	$1\frac{1}{8}$	...	...	same as *t*	$\frac{1}{2}$	2.5– 4.8
$2\frac{1}{4}$	$\frac{3}{16}$ to $\frac{3}{8}$	$1\frac{1}{4}$	...	...		$\frac{5}{8}$	2.7– 5.4
$2\frac{1}{2}$	$\frac{3}{16}$ to $\frac{1}{2}$	$1\frac{3}{8}$	...	...		$\frac{5}{8}$	3.1– 7.8
$2\frac{3}{4}$	$\frac{1}{4}$ to $\frac{1}{2}$	$1\frac{5}{8}$	...	...		$\frac{3}{4}$	4.5– 8.6
3	$\frac{1}{4}$ to $\frac{5}{8}$	$1\frac{3}{4}$	...	...		$\frac{7}{8}$	4.9–11.5
$3\frac{1}{2}$	$\frac{5}{16}$ to $\frac{5}{8}$	2	...	...		$\frac{7}{8}$	7.1–13.7
4	$\frac{5}{16}$ to $\frac{3}{4}$	$2\frac{1}{4}$	...	...		$\frac{7}{8}$	8.2–18.6
5	$\frac{3}{8}$ to $\frac{15}{16}$	3	2	$1\frac{3}{4}$		$\frac{7}{8}$	12.3–29.4

I-Beams

D	F	t	C	G	d max.	Wgt per Ft.
5	3	$\frac{7}{32}$	$1\frac{3}{4}$	$\frac{5}{16}$	$\frac{1}{2}$	9.75
6	$3\frac{11}{32}$	$\frac{7}{32}$	2	$\frac{3}{8}$	$\frac{5}{8}$	12.25
7	$3\frac{21}{32}$	$\frac{1}{4}$	$2\frac{1}{4}$	$\frac{3}{8}$	$\frac{5}{8}$	15.00
8	4	$\frac{1}{4}$	$2\frac{1}{4}$	$\frac{7}{16}$	$\frac{3}{4}$	18.00
9	$4\frac{11}{32}$	$\frac{9}{32}$	$2\frac{1}{2}$	$\frac{7}{16}$	$\frac{3}{4}$	21.00
10	$4\frac{21}{32}$	$\frac{5}{16}$	$2\frac{3}{4}$	$\frac{7}{16}$	$\frac{3}{4}$	25.00
12	5	$\frac{11}{32}$	3	$\frac{1}{2}$	$\frac{3}{4}$	31.50
12	6	$\frac{13}{16}$	$3\frac{1}{2}$	$\frac{7}{8}$	$\frac{3}{4}$	65.00

channels

D	F	C	G	d max.	t	Weight per Ft.
5	$1\frac{3}{4}$	$1\frac{1}{8}$	$\frac{5}{16}$	$\frac{1}{2}$	$\frac{3}{16}$	6.50
6	$1\frac{29}{32}$	$1\frac{1}{8}$	$\frac{5}{16}$	$\frac{5}{8}$	$\frac{3}{16}$	8.00
7	$2\frac{3}{32}$	$1\frac{1}{4}$	$\frac{3}{8}$	$\frac{5}{8}$	$\frac{7}{32}$	9.75
8	$2\frac{1}{4}$	$1\frac{3}{8}$	$\frac{3}{8}$	$\frac{3}{4}$	$\frac{7}{32}$	11.25
9	$2\frac{7}{16}$	$1\frac{3}{8}$	$\frac{7}{16}$	$\frac{3}{4}$	$\frac{1}{4}$	13.25
10	$2\frac{9}{16}$	$1\frac{1}{2}$	$\frac{7}{16}$	$\frac{3}{4}$	$\frac{1}{4}$	15.00
12	$2\frac{15}{16}$	$1\frac{3}{4}$	$\frac{1}{2}$	$\frac{3}{4}$	$\frac{9}{32}$	20.50
12	$3\frac{5}{16}$	2	$\frac{3}{4}$	$\frac{3}{4}$	$\frac{5}{8}$	40.00

Z-Bars

D	F	C	t	d max.	Weight per Ft.
3	$2\frac{5}{8}$	$1\frac{1}{2}$	$\frac{1}{4}$	$\frac{3}{4}$	6.60
4	$2\frac{7}{8}$	$1\frac{3}{4}$	$\frac{1}{4}$	$\frac{7}{8}$	7.88
5	$3\frac{3}{16}$	2	$\frac{5}{16}$	$\frac{7}{8}$	11.42
5	$3\frac{1}{4}$	2	$\frac{1}{2}$	$\frac{7}{8}$	17.78
6	$3\frac{1}{2}$	$2\frac{1}{4}$	$\frac{3}{8}$	$\frac{7}{8}$	15.61
6	$3\frac{9}{16}$	$2\frac{1}{4}$	$\frac{5}{8}$	$\frac{7}{8}$	25.36

TABLE 5

FLANGE UNIONS ON PAGE 61

TABLE 6

FRICTION OF WATER IN PIPES ON PAGE 63

TABLE 7

FRICTION OF WATER IN ELBOWS ON PAGE 64

TABLE 8

SIZE OF PIPE FITTINGS

Nom. Pipe Size. ″	Nipple Lengths.		Standard Wrought Iron Pipe Couplings. Black or Galvan.		Caps.	
	Close.	Short.	Outside Dia.	Length.	Length.	Dia.
$\frac{1}{8}$	$\frac{3}{4}$	$1\frac{1}{2}$	$\frac{5}{8}$	$\frac{7}{8}$		
$\frac{1}{4}$	$\frac{7}{8}$	$1\frac{1}{2}$	$\frac{11}{16}$	$\frac{15}{16}$		
$\frac{3}{8}$	1	$1\frac{1}{2}$	$\frac{7}{8}$	$1\frac{1}{8}$		
$\frac{1}{2}$	$1\frac{1}{8}$	$1\frac{1}{2}$	$1\frac{1}{32}$	$1\frac{3}{8}$	$\frac{7}{8}$	$1\frac{1}{16}$
$\frac{3}{4}$	$1\frac{3}{8}$	2	$1\frac{5}{16}$	$1\frac{5}{8}$	$\frac{7}{8}$	$1\frac{1}{4}$
1	$1\frac{1}{2}$	2	$1\frac{23}{32}$	$1\frac{7}{8}$		
$1\frac{1}{4}$	$1\frac{5}{8}$	$2\frac{1}{2}$	2	$2\frac{1}{8}$	$1\frac{1}{4}$	2
$1\frac{1}{2}$	$1\frac{3}{4}$	$2\frac{1}{2}$	$2\frac{1}{4}$	$2\frac{3}{8}$	$1\frac{3}{8}$	$2\frac{1}{2}$
2	2	$2\frac{1}{2}$	$2\frac{25}{32}$	$2\frac{5}{8}$	$1\frac{1}{2}$	$2\frac{3}{4}$
$2\frac{1}{2}$	$2\frac{1}{2}$	3	$3\frac{9}{32}$	$2\frac{7}{8}$	$1\frac{5}{8}$	$3\frac{1}{4}$
3	$2\frac{1}{2}$	3	$3\frac{31}{32}$	$3\frac{1}{8}$	$1\frac{7}{8}$	4
$3\frac{1}{2}$	$2\frac{3}{4}$	4	$4\frac{9}{16}$	$3\frac{5}{8}$	2	$4\frac{1}{2}$
4	3	4	$5\frac{1}{16}$	$3\frac{5}{8}$	2	$5\frac{1}{8}$

No. Pipe Size. ″	Plugs.			Bushings (Fig. 29).			Locknuts.	
	Length. Thread.	Length. Square Head.	Side of Square Head.	Thick. Hex. Head. (*A*).	Hex. Across Flats. (*C*).	Length. Thread. (*B*).	Thick.	Hex. Across Flats.
$\frac{1}{8}$	$\frac{3}{8}$	$\frac{1}{4}$	$\frac{1}{4}$					
$\frac{1}{4}$	$\frac{7}{16}$	$\frac{1}{4}$	$\frac{3}{8}$				$\frac{1}{4}$	$\frac{7}{8}$
$\frac{3}{8}$	$\frac{1}{2}$	$\frac{5}{16}$	$\frac{3}{8}$	$\frac{1}{4}$	$\frac{3}{4}$	$\frac{3}{8}$	$\frac{5}{16}$	1
$\frac{1}{2}$	$\frac{9}{16}$	$\frac{5}{16}$	$\frac{3}{8}$	$\frac{1}{4}$	$\frac{15}{16}$	$\frac{1}{2}$	$\frac{3}{8}$	$1\frac{1}{4}$
$\frac{3}{4}$	$\frac{5}{8}$	$\frac{3}{8}$	$\frac{7}{16}$	$\frac{1}{4}$	$1\frac{1}{8}$	$\frac{1}{2}$	$\frac{3}{8}$	$1\frac{1}{2}$
1	$\frac{3}{4}$	$\frac{7}{16}$	$\frac{11}{16}$	$\frac{3}{8}$	$1\frac{7}{16}$	$\frac{1}{2}$	$\frac{7}{16}$	$1\frac{7}{8}$
$1\frac{1}{4}$	$\frac{7}{8}$	$\frac{1}{2}$	$\frac{3}{4}$	$\frac{3}{8}$	$1\frac{3}{4}$	$\frac{3}{4}$	$\frac{1}{2}$	$2\frac{1}{8}$
$1\frac{1}{2}$	$\frac{7}{8}$	$\frac{1}{2}$	$\frac{13}{16}$	$\frac{3}{8}$	$1\frac{7}{8}$	$\frac{13}{16}$	$\frac{1}{2}$	$2\frac{3}{8}$
2	1	$\frac{9}{16}$	$1\frac{1}{16}$	$\frac{3}{8}$	$2\frac{3}{8}$	$\frac{7}{8}$	$\frac{1}{2}$	3
$2\frac{1}{2}$	1	$\frac{5}{8}$	$1\frac{3}{16}$	$\frac{7}{16}$	3	$\frac{15}{16}$	$\frac{5}{8}$	$4\frac{1}{8}$
3	$1\frac{1}{8}$	$\frac{5}{8}$	$1\frac{5}{16}$	$\frac{1}{2}$	$3\frac{1}{2}$	1	$\frac{3}{4}$	$4\frac{1}{2}$
$3\frac{1}{2}$	$1\frac{1}{4}$	$\frac{3}{4}$	$1\frac{1}{2}$	$\frac{1}{2}$	$4\frac{1}{2}$	$1\frac{1}{4}$	$\frac{3}{4}$	5
4	$1\frac{3}{8}$	$\frac{3}{4}$	$1\frac{3}{4}$	$\frac{1}{2}$	$5\frac{1}{8}$	$1\frac{1}{4}$	1	$6\frac{3}{4}$

TABLE 9

STANDARD DIMENSIONS OF WROUGHT-IRON WELDED PIPE

1	2	3	4	5	6	7	8	9	10	11	12
Diameter of Tube.			$\frac{D_0 - D_i}{2}$	Screwed Ends.							
Nominal Inside. Inches.	D_i = actual Inside. Inches.	D_0 = actual Outside. Inches.	Thickness of Metal. Inches.	D_3 = Dia. at Bottom Threads. Inches.	D_2 = Dia. at End Threads. Inches.	E = Depth of Threads. Inches.	T = Length Perfect Screw. Inches.	Total Dist. enters Fitting. Inches.	Threads per Inch. Number.	Standard Pipe Weight per Foot. Pounds.	Inside Cross-section Area. Square inch.
$\frac{1}{8}$	0.270	0.405	0.068	0.334	0.393	0.029	0.190	0.190	27	0.241	0.056
$\frac{1}{4}$	0.364	0.540	0.088	0.433	0.522	0.044	0.290	0.290	18	0.420	0.104
$\frac{3}{8}$	0.494	0.675	0.091	0.568	0.656	0.044	0.300	0.300	18	0.559	0.190
$\frac{1}{2}$	0.623	0.840	0.109	0.701	0.815	0.057	0.390	0.390	14	0.837	0.303
$\frac{3}{4}$	0.824	1.050	0.113	0.911	1.025	0.057	0.400	0.400	14	1.115	0.533
1	1.048	1.315	0.134	1.144	1.283	0.069	0.510	0.510	$11\frac{1}{2}$	1.668	0.860
$1\frac{1}{4}$	1.380	1.660	0.140	1.488	1.626	0.069	0.540	0.540	$11\frac{1}{2}$	2.244	1.495
$1\frac{1}{2}$	1.610	1.900	0.145	1.728	1.866	0.069	0.550	0.550	$11\frac{1}{2}$	2.678	2.035
2	2.067	2.375	0.154	2.201	2.339	0.069	0.580	0.580	$11\frac{1}{2}$	3.609	3.355
$2\frac{1}{2}$	2.468	2.875	0.204	2.619	2.819	0.100	0.890	0.890	8	5.739	4.780
3	3.067	3.500	0.217	3.241	3.441	0.100	0.950	0.950	8	7.536	7.382
$3\frac{1}{2}$	3.548	4.000	0.226	3.738	3.938	0.100	1.000	1.000	8	9.001	9.886
4	4.026	4.500	0.237	4.234	4.434	0.100	1.050	1.050	8	10.665	12.730
$4\frac{1}{2}$	4.508	5.000	0.246	4.731	4.931	0.100	1.100	1.100	8	12.340	15.960
5	5.045	5.563	0.259	5.290	5.490	0.100	1.160	1.160	8	14.504	19.985
6	6.065	6.625	0.280	6.346	6.546	0.100	1.260	1.260	8	18.762	28.886
7	7.023	7.625	0.301	7.340	7.540	0.100	1.360	1.360	8	23.271	38.743
8	7.982	8.625	0.322	8.334	8.534	0.100	1.460	1.460	8	28.177	50.021
9	9.000	9.688	0.344	9.327	9.527	0.100	1.570	1.570	8	33.701	62.722
10	10.019	10.750	0.366	10.445	10.645	0.100	1.680	1.680	8	40.065	78.822

Table 10 on page 16.

TABLE 11

STANDARD STEAM FLANGES (FOR CAST-IRON CYLINDERS)

Cylinder Size, *P.*	Cylinder Thickness, *T.*	Rad Fillet, *R.*	Diameter Flange, *F.*		Thickness Flange at Hub, *H.*	Thickness Flange at Edge, *E.*		Diameter of Bolt Circle, *C.*		Number of Bolts.	Size of Bolts, *B.*	
			75 lbs.	200 lbs.		75 lbs.	200 lbs.	75 lbs.	200 lbs.		75 lbs.	200 lbs.
2	0.41	1/8	.....	6	1	.....	5/8	.....	4 3/4	4	1/2	5/8
2 1/2	0.43	1/8	.....	7	1 1/8	.....	11/16	.....	5 1/2	4	1/2	5/8
3	0.45	1/8	.....	7 1/2	1 1/4	.....	3/4	.....	6	4	1/2	5/8
3 1/2	0.47	1/8	.....	8 1/2	1 1/4	.....	13/16	.....	7	4	1/2	5/8
4	0.49	1/8	.....	9	1 3/8	.....	15/16	.....	7 1/2	4	5/8	3/4
4 1/2	0.50	1/8	.....	9 1/4	1 3/8	.....	15/16	.....	7 3/4	8	5/8	3/4
5	0.53	1/8	.....	10	1 1/2	.....	15/16	.....	8 1/2	8	5/8	3/4
6	0.56	1/8	.....	11	1 1/2	.....	1	.....	9 1/2	8	5/8	3/4
7	0.60	1/8	.....	12 1/2	1 1/2	.....	1 1/16	.....	10 3/4	8	5/8	3/4
8	0.64	1/8	.....	13 1/2	1 3/4	.....	1 1/8	.....	11 3/4	8	5/8	3/4
9	0.68	3/16	.....	15	1 3/4	.....	1 1/8	.....	13 1/4	12	5/8	3/4
10	0.71	3/16	.....	16	2	.....	1 3/16	.....	14 1/4	12	3/4	7/8
12	0.79	3/16	.....	19	2	.....	1 1/4	.....	17	12	3/4	7/8
14	0.86	3/16	.....	21	2	.....	1 3/8	.....	18 3/4	12	7/8	1
16	0.95	3/16	.....	23 1/2	2 1/4	.....	1 7/16	.....	21 1/4	16	7/8	1
18	1.02	3/16	.....	25	.....	.....	1 9/16	.....	22 3/4	16	1	1 1/8
20	1.09	3/16	.....	27 1/2	.....	.....	1 11/16	.....	25	20	1	1 1/8
22	1.18	1/4	.....	29 1/2	.....	.....	1 13/16	.....	27 1/4	20	1	1 1/4
24	1.25	1/4	31 1/2	32	.....	1 1/4	1 7/8	29 1/4	29 1/2	20	1	1 1/4
26	1.30	1/4	33 3/4	34 1/4	.....	1 3/8	2	31 1/4	31 3/4	24	1	1 1/4
28	1.38	1/4	36	36 1/2	.....	1 7/16	2 1/16	33 1/2	34	28	1	1 1/4
30	1.48	1/4	38	38 3/4	.....	1 1/2	2 1/8	35 1/2	36	28	1 1/8	1 3/8
36	1.71	1/4	44 1/2	45 3/4	.....	1 3/4	2 3/8	42	42 3/4	32	1 1/8	1 3/8
42	1.87	1/4	51	52 3/4	.....	1 7/8	2 5/8	48 1/2	49 1/2	36	1 1/4	1 1/2
48	2.17	1/4	57 1/2	59 1/2	.....	2	2 3/4	54 3/4	56	44	1 3/8	1 1/2

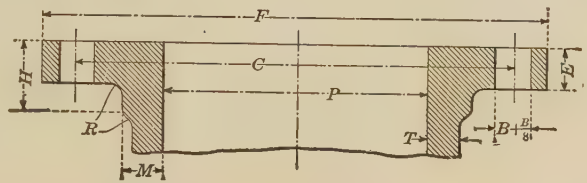

TABLE 10

DIMENSIONS OF PLAIN OIL CUPS (BRASS)

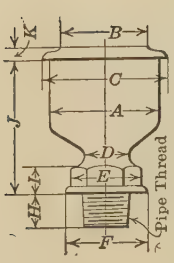

Nom. Size. Pipe, Thread.	A	B	C	D	E	F	H	I	J	K
$\frac{1}{8}''$	$\frac{7}{8}''$	$\frac{3}{4}''$	$1''$	$\frac{3}{8}''$	$\frac{5}{8}''$	$\frac{3}{4}''$	$\frac{1}{4}''$	$\frac{3}{16}''$	$1\frac{1}{4}''$	$\frac{3}{16}''$
$\frac{1}{4}''$	$1\frac{1}{8}$	$1\frac{7}{8}$	$1\frac{3}{8}$	$\frac{1}{2}$	$\frac{3}{4}$	$\frac{7}{8}$	$\frac{1}{2}$	$\frac{1}{4}$	$1\frac{1}{2}$	$\frac{3}{16}$
$\frac{3}{8}''$	$1\frac{3}{4}$	$1\frac{3}{8}$	2	$\frac{5}{8}$	$\frac{7}{8}$	$1\frac{1}{8}$	$\frac{5}{8}$	$\frac{1}{4}$	$2\frac{1}{2}$	$\frac{1}{4}$
$\frac{1}{2}''$	$2\frac{3}{4}$	$2\frac{1}{4}$	$2\frac{7}{8}$	$\frac{3}{4}$	$1\frac{1}{4}$	$1\frac{1}{2}$	$\frac{3}{4}$	$\frac{3}{8}$	$4\frac{1}{4}$	$\frac{1}{4}$

TABLE 12

SPLIT PIN OR SPRING COTTER

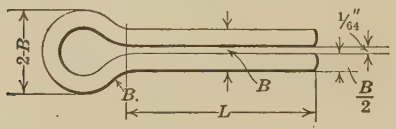

B	L	Wire Gage No.	B	L	Wire Gage No.
$\frac{3}{32}$	$\frac{1}{2}$–2	13	$\frac{1}{4}$	1–4	4
$\frac{7}{64}$	$\frac{1}{2}$–2	12	$\frac{5}{16}$	1–4	1
$\frac{1}{8}$	$\frac{1}{2}$–$2\frac{1}{2}$	11	$\frac{3}{8}$	$1\frac{1}{2}$–4	
$\frac{9}{64}$	$\frac{1}{2}$–$2\frac{1}{2}$	10	$\frac{7}{16}$	$\frac{3}{4}$–5	
$\frac{5}{32}$	$\frac{1}{2}$–$2\frac{1}{2}$	9	$\frac{1}{2}$	2 –6	
$\frac{11}{64}$	$\frac{1}{2}$–$2\frac{1}{2}$	8	$\frac{5}{8}$	3 –6	
$\frac{3}{16}$	$\frac{3}{4}$–3	7	Lengths vary by $\frac{1}{4}$ up to 4″ and by 1″ from 4″ to 6″.		
$\frac{13}{64}$	$\frac{3}{4}$–3	6			
$\frac{7}{32}$	1–3	5			

TABLE 13

TAPER PIN

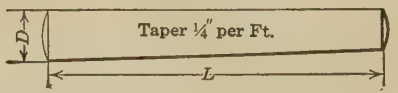

Number.....	0	1	2	3	4	5	6	7	8	9	10
D actual.....	.156	.172	.193	.219	.250	.289	.341	.409	.492	.591	.706
D approx.....	$\frac{5}{32}$	$\frac{11}{64}$	$\frac{3}{16}$	$\frac{7}{32}$	$\frac{1}{4}$	$\frac{19}{64}$	$\frac{11}{32}$	$\frac{13}{32}$	$\frac{1}{2}$	$\frac{19}{32}$	$\frac{23}{32}$
L.....	$\frac{3}{4}$–1	$\frac{3}{4}$–$1\frac{1}{4}$	$\frac{3}{4}$–$1\frac{1}{2}$	$\frac{3}{4}$–$1\frac{3}{4}$	$\frac{3}{4}$–2	$\frac{3}{4}$–$2\frac{1}{4}$	$\frac{3}{4}$–$3\frac{1}{4}$	1–$3\frac{3}{4}$	$1\frac{1}{4}$–$4\frac{1}{2}$	$1\frac{1}{2}$–$5\frac{1}{4}$	$1\frac{1}{2}$–6

Lengths vary by quarters between limits given.

Table 14

SCREW THREADS AND BOLTS

New Standards Recommended by the Mechanical Branch of the Association of Licensed Automobile Manufacturers

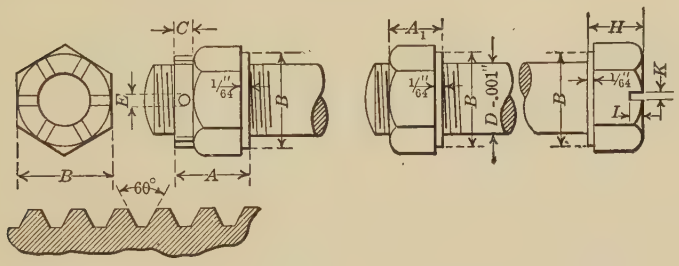

B refers to all nuts and screwheads.

d = diameter of cotter pins.

$D \times 1.5$ = length of threaded portion.

P = pitch of thread.

$\frac{P}{8}$ = flat top.

TABLE OF DIMENSIONS

D	P	A	A_1	B	C	E	H	I	K	d
$\frac{1}{4}$	28	$\frac{9}{32}$	$\frac{7}{32}$	$\frac{7}{16}$	$\frac{3}{32}$	$\frac{5}{64}$	$\frac{3}{16}$	$\frac{3}{32}$	$\frac{1}{16}$	$\frac{1}{16}$
$\frac{5}{16}$	24	$\frac{21}{64}$	$\frac{17}{64}$	$\frac{1}{2}$	$\frac{3}{32}$	$\frac{5}{64}$	$\frac{15}{64}$	$\frac{7}{64}$	$\frac{1}{16}$	$\frac{1}{16}$
$\frac{3}{8}$	24	$\frac{13}{32}$	$\frac{21}{64}$	$\frac{5}{8}$	$\frac{1}{8}$	$\frac{1}{8}$	$\frac{9}{32}$	$\frac{1}{8}$	$\frac{3}{32}$	$\frac{3}{32}$
$\frac{7}{16}$	20	$\frac{29}{64}$	$\frac{3}{8}$	$\frac{5}{8}$	$\frac{1}{8}$	$\frac{1}{8}$	$\frac{21}{64}$	$\frac{1}{8}$	$\frac{3}{32}$	$\frac{3}{32}$
$\frac{1}{2}$	20	$\frac{9}{16}$	$\frac{7}{16}$	$\frac{3}{4}$	$\frac{3}{16}$	$\frac{1}{8}$	$\frac{3}{8}$	$\frac{1}{8}$	$\frac{3}{32}$	$\frac{3}{32}$
$\frac{9}{16}$	18	$\frac{39}{64}$	$\frac{31}{64}$	$\frac{7}{8}$	$\frac{3}{16}$	$\frac{5}{32}$	$\frac{27}{64}$	$\frac{1}{8}$	$\frac{3}{32}$	$\frac{1}{8}$
$\frac{5}{8}$	18	$\frac{23}{32}$	$\frac{35}{64}$	$\frac{15}{16}$	$\frac{1}{4}$	$\frac{5}{32}$	$\frac{15}{32}$	$\frac{1}{8}$	$\frac{3}{32}$	$\frac{1}{8}$
$\frac{11}{16}$	16	$\frac{49}{64}$	$\frac{19}{32}$	1	$\frac{1}{4}$	$\frac{5}{32}$	$\frac{33}{64}$	$\frac{1}{8}$	$\frac{3}{32}$	$\frac{1}{8}$
$\frac{3}{4}$	16	$\frac{13}{16}$	$\frac{21}{32}$	$1\frac{1}{16}$	$\frac{1}{4}$	$\frac{5}{32}$	$\frac{9}{16}$	$\frac{1}{8}$	$\frac{3}{32}$	$\frac{1}{8}$
$\frac{7}{8}$	14	$\frac{29}{32}$	$\frac{49}{64}$	$1\frac{1}{4}$	$\frac{1}{4}$	$\frac{5}{32}$	$\frac{21}{32}$	$\frac{1}{8}$	$\frac{3}{32}$	$\frac{1}{8}$
1	14	1	$\frac{7}{8}$	$1\frac{7}{16}$	$\frac{1}{4}$	$\frac{5}{32}$	$\frac{3}{4}$	$\frac{1}{8}$	$\frac{3}{32}$	$\frac{1}{8}$
$1\frac{1}{8}$	12	$1\frac{5}{32}$	$\frac{63}{64}$	$1\frac{5}{8}$	$\frac{5}{16}$	$\frac{7}{32}$	$\frac{27}{32}$	$\frac{7}{32}$	$\frac{5}{32}$	$\frac{11}{64}$
$1\frac{1}{4}$	12	$1\frac{1}{4}$	$1\frac{3}{32}$	$1\frac{13}{16}$	$\frac{5}{16}$	$\frac{7}{32}$	$\frac{15}{16}$	$\frac{7}{32}$	$\frac{5}{32}$	$\frac{11}{64}$
$1\frac{3}{8}$	12	$1\frac{13}{32}$	$1\frac{13}{64}$	2	$\frac{3}{8}$	$\frac{1}{4}$	$1\frac{1}{32}$	$\frac{1}{4}$	$\frac{3}{16}$	$\frac{13}{64}$
$1\frac{1}{2}$	12	$1\frac{1}{2}$	$1\frac{5}{16}$	$2\frac{3}{16}$	$\frac{3}{8}$	$\frac{1}{4}$	$1\frac{1}{8}$	$\frac{1}{4}$	$\frac{3}{16}$	$\frac{13}{64}$

High-grade steel { 100,000 pounds per square inch tensile strength.
60,000 pounds per square inch elastic limit.

TABLE 15

WOODRUFF KEYS

SMALL SIZES

No. of Key	*D*	*C*	*B*	No. of Key	*D*	*C*	*B*
1	$\frac{1}{2}$	$\frac{1}{16}$	$\frac{3}{64}$	*B*	1	$\frac{5}{16}$	$\frac{1}{16}$
2	$\frac{1}{2}$	$\frac{3}{32}$	$\frac{3}{64}$	16	$1\frac{1}{8}$	$\frac{3}{16}$	$\frac{5}{64}$
3	$\frac{1}{2}$	$\frac{1}{8}$	$\frac{3}{64}$	17	$1\frac{1}{8}$	$\frac{7}{32}$	$\frac{5}{64}$
4	$\frac{5}{8}$	$\frac{3}{32}$	$\frac{1}{16}$	18	$1\frac{1}{8}$	$\frac{1}{4}$	$\frac{5}{64}$
5	$\frac{5}{8}$	$\frac{1}{8}$	$\frac{1}{16}$	*C*	$1\frac{1}{8}$	$\frac{5}{16}$	$\frac{5}{64}$
6	$\frac{5}{8}$	$\frac{5}{32}$	$\frac{1}{16}$	19	$1\frac{1}{4}$	$\frac{3}{16}$	$\frac{5}{64}$
7	$\frac{3}{4}$	$\frac{1}{8}$	$\frac{1}{16}$	20	$1\frac{1}{4}$	$\frac{7}{32}$	$\frac{5}{64}$
8	$\frac{3}{4}$	$\frac{5}{32}$	$\frac{1}{16}$	21	$1\frac{1}{4}$	$\frac{1}{4}$	$\frac{5}{64}$
9	$\frac{3}{4}$	$\frac{3}{16}$	$\frac{1}{16}$	*D*	$1\frac{1}{4}$	$\frac{5}{16}$	$\frac{5}{64}$
10	$\frac{7}{8}$	$\frac{5}{32}$	$\frac{1}{16}$	*E*	$1\frac{1}{4}$	$\frac{3}{8}$	$\frac{5}{64}$
11	$\frac{7}{8}$	$\frac{3}{16}$	$\frac{1}{16}$	22	$1\frac{3}{8}$	$\frac{1}{4}$	$\frac{3}{32}$
12	$\frac{7}{8}$	$\frac{7}{32}$	$\frac{1}{16}$	23	$1\frac{3}{8}$	$\frac{5}{16}$	$\frac{3}{32}$
A	$\frac{7}{8}$	$\frac{1}{4}$	$\frac{1}{16}$	*F*	$1\frac{3}{8}$	$\frac{3}{8}$	$\frac{3}{32}$
13	1	$\frac{3}{16}$	$\frac{1}{16}$	24	$1\frac{1}{2}$	$\frac{1}{4}$	$\frac{7}{64}$
14	1	$\frac{7}{32}$	$\frac{1}{16}$	25	$1\frac{1}{2}$	$\frac{5}{16}$	$\frac{7}{64}$
15	1	$\frac{1}{4}$	$\frac{1}{16}$	*G*	$1\frac{1}{2}$	$\frac{3}{8}$	$\frac{7}{64}$

LARGE SIZES

No. of Key	*F*	*E*	*D*	*C*	*B*	*A*
26	$1\frac{23}{32}$	$1\frac{27}{32}$	$2\frac{1}{8}$	$\frac{3}{16}$	$\frac{17}{32}$	$\frac{3}{32}$
27	$1\frac{23}{32}$	$1\frac{27}{32}$	$2\frac{1}{8}$	$\frac{1}{4}$	$\frac{17}{32}$	$\frac{3}{32}$
28	$1\frac{23}{32}$	$1\frac{27}{32}$	$2\frac{1}{8}$	$\frac{5}{16}$	$\frac{17}{32}$	$\frac{3}{32}$
29	$1\frac{23}{32}$	$1\frac{27}{32}$	$2\frac{1}{8}$	$\frac{3}{8}$	$\frac{17}{32}$	$\frac{3}{32}$
30	$2\frac{7}{8}$	$3\frac{7}{64}$	$3\frac{1}{2}$	$\frac{3}{8}$	$\frac{13}{16}$	$\frac{3}{16}$
31	$2\frac{7}{8}$	$3\frac{7}{64}$	$3\frac{1}{2}$	$\frac{7}{16}$	$\frac{13}{16}$	$\frac{3}{16}$
32	$2\frac{7}{8}$	$3\frac{7}{64}$	$3\frac{1}{2}$	$\frac{1}{2}$	$\frac{13}{16}$	$\frac{3}{16}$
33	$2\frac{7}{8}$	$3\frac{7}{64}$	$3\frac{1}{2}$	$\frac{9}{16}$	$\frac{13}{16}$	$\frac{3}{16}$
34	$2\frac{7}{8}$	$3\frac{7}{64}$	$3\frac{1}{2}$	$\frac{5}{8}$	$\frac{13}{16}$	$\frac{3}{16}$

Woodruff keys are shown on page 100.

Table 16
BEARING PRESSURES FOR BEARINGS

	Pressure in Pounfds per Square Inch.
Crank pins of shearing machines	3000
Crosshead neck bearings (intermittent load)	800–2100
Wrist pins (gas engines)	800–1000
Crank pins (small engines), land (slow speed)	150– 200
" (marine engines)	400– 500
" (land engines (fast))	500– 800
" torpedo-boats	850–1000
" locomotives	1200–1800
" gasoline engines	350–1200
Main bearings (gasoline engines)	350– 400
" slow speed stationary	280– 540
" high speed stationary	210– 370
" marine engine (naval)	275– 400
" " (merchant)	200– 300
Flywheel shaft bearings	150– 250
Eccentric sheaves	60– 140
Heavy line shaft (brass or Babbitt)	100– 150
Light line shaft (cast-iron bearings)	15– 25
Line shaft on gun metal bearings	200
Generator and dynamo bearings	30– 80
Pivots, wrought-iron shaft on gun metal step	200– 700
Collar thrust bearings for propeller shafts	50– 80
Slides, cast-iron on Babbitt	200– 300
" cast iron on cast iron	25– 100

Table 17
COEFFICIENTS OF FRICTION
Cast Iron on Bronze, 720 Feet per Minute. (Thurston.)

Oils	Pressure per Square Inch	
	16 lbs.	48 lbs.
Sperm, lard	0.138–0.192	0.077–0.144
Olive, cotton-seed, rape	0.107–0.245	0.079–0.131
Cod and menhaden	0.124–0.167	0.081–0.122
Mineral	0.145–0.233	0.094–0.222

COEFFICIENT OF FRICTION OF VARIOUS SURFACES

Surfaces	Coefficient of Friction
Wood on wood dry	0.25–0.5
" " soaped	0.2 –0.04
Metals on dry wood (oak)	0.5 –0.6
" wet wood (oak)	0.24–0.26
" soapy	0.2
Leather on metals dry	0.56
" " wet	0.36
" " greasy	0.23
" " oily	0.15
Metals on metals, dry	0.15–0.2
" " wet	0.3
Smooth surfaces continuously greased	0.05
" " best results	0.03–0.036
Leather on oak	0.27–0.38

TABLE 18
WEIGHT OF SUBSTANCES IN POUNDS

	Cubic Inch	Cubic Foot.
Brass	0.3	520
Bronze	0.319	552
Brick (common)	0.064	112
" (fire)	0.08–0.09	140–150
Copper	0.318	550
Cast iron	0.26	450
Earth	0.046	80–100
Glass	0.095	165
Granite	0.092	160–170
Lead	0.411	710
Sand	0.052	90–106
Sandstone	0.08–0.09	140–150
Steel	0.283	490
Trap rock	0.1	170–200
Water	0.036	62.35
Wrought iron	0.282	490
Zinc	0.248	428

TABLE 19
MEAN STRENGTH OF MATERIALS IN POUNDS PER SQUARE INCH

	Tension	Compression.	Shear.
Wrought iron	55,000	50,000	45,000
Cast iron	18,000	90,000	11,000
Cast brass	18,000	10,000	
Steel	65,000	.....	48,000
Stone	9000–12,000	3000–18,000	
Brick	280–300	800– 4,000	

TABLE 20
FACTORS OF SAFETY (AVERAGE)

Material.	Factor For.			
	Dead Load.	Live or Varying Load Producing		In Structures Subjected to Varying Loads and Shocks.
		Stress of One Kind	Equal alt. Stresses of Different Kinds	
Cast iron	4	6	10	15
Wrought iron and steel	3	5	8	12
Timber	7	10	15	20
Brickwork and masonry	20	30		

ELEMENTARY
MACHINE DRAWING AND DESIGN

CHAPTER I

WORKING DRAWINGS

1. Working Drawings are divided into two general classes, viz.: **Assembly Drawings** and **Detail Drawings.**

The *assembly* drawing shows the machine with all its parts in their proper position in the machine. A few of the principal dimensions are given and the parts may be indicated by distinguishing marks as *A*, *B*, *C*, etc., to serve as a guide to the erector of the machine. The overall dimensions are serviceable in determining the space required for setting up the machine.

Detail drawings give minute particulars regarding the form and construction of each part of a machine. They are usually drawn to a larger scale than assembly drawings and are sent into the shop for the use of the workmen. Consequently, they are often called **shop** drawings.

An example of an assembly drawing is the globe valve in Fig. 180, facing page 283.

Detail drawings will be found on nearly all the plates in these notes.

2. A Detail Drawing is one which contains all the information the workmen may need who are concerned in the making of the object delineated. It may be a sketch, or an isometric projection or an orthographic projection made on paper or cloth in pencil or ink, or it may be in the form of a photographic print. Orthographic projections only are referred to in these notes.

Above all things a working drawing should be clearly made and self-explanatory so that no questions need be asked regarding the object represented. All the dimensions should be clearly and accurately shown, the material of which each part is made should be stated and the finish required on the different surfaces, also the number of pieces required of the drawing shown, the sizes and kinds of holes, etc. If the drawing is to be used by several workmen in the various stages of manufacture of the object drawn, the information which one workman may need is often of no value to another. The pattern maker may need some instruction and dimensions which the machinist does not need as he has the object itself to work on. However, the drawing must give him the proper information as to what work he shall do on the object.

A drawing should be neatly made and the notes printed on it should be in a clear legible style of printing. Many a drawing has been spoiled in appearance by the printing on it.

3. The steps to be taken in the making of a working drawing may be presented as follows:

(1) PENCILLING ON PAPER.
Layout of views, blocking in, completion of outline, dimensioning, lettering.

(2) TRACING ON CLOTH.

(3) DUPLICATION OF ORIGINAL, by photo printing.

Under (1), more in detail, we have the following:

(*a*) Choice of views;
(*b*) Choice of scale and size of paper;
(*c*) Location of views on sheet;
(*d*) Center lines of views;
(*e*) Drawing of principal lines in all views;
(*f*) Drawing of other or secondary lines in all views;
(*g*) Location of bolts, keys, shafts, etc.;
(*h*) Dimension lines, extension lines, arrows, dimensions;
(*i*) Section lining, notes, title, border, trimming line.

Under (2), *tracing* is comprised:

(*a*) Stretching cloth over pencil work, powdering cloth;
(*b*) Inking in circles, arcs, irregular curves;
(*c*) Inking in horizontal lines with T square and vertical lines with triangle;
(*d*) Inking in inclined lines, shade lines (if desired);

(*e*) Dimension lines, extension lines, center lines;

(*f*) Arrows, figures, notes, title, section lines, border, trimming, cleaning.

Do not ink in more views on tracing cloth than can be finished in a day.

All the drawings comprised in these notes can be drawn on five sizes of paper. No. 1, $8'' \times 10\frac{1}{2}''$, No. 2, $11'' \times 15$; No. 3, $22'' \times 15''$; No. 4, $20'' \times 27''$; and No. 5, $40'' \times 27''$.

The dimension first given is the side of the sheet to be placed horizontal. Nearly all the objects can be drawn on the first three sizes of paper.

Before commencing to make a drawing find out how many views are required of the objects to be drawn, the scale of the drawing, and how much room each view will need. Draw in the center lines of each view as fine, light, continuous lines.

Scale of Drawing

4. Scales. In laying off the dimensions on a drawing which is not full size, it is customary to use scales which are made to correspond to the size of drawing which is wanted These scales, although reduced in length, are always divided like a foot rule. Thus a quarter size scale is represented by 3 inches divided into twelve parts to represent inches, and these inches divided again into sixteen parts to represent sixteenths of an inch. When the dimension is laid off by this scale it is spoken of always as the full size dimension.

In reducing to half size it is customary to use the full size scale and consider each half inch as if it were an inch, each eighth as a quarter, each sixteenth as an eighth, and each thirty-second as a sixteenth.

In order to lay off $2\frac{13}{16}''$ half size, count off two $\frac{1}{2}''$ spaces, six $\frac{1}{16}''$ spaces, and one $\frac{1}{32}''$ space just as if each half inch was marked 1–2–3, etc., instead of the inches. See Fig. 1 (*B*). Never divide the full size dimension by two to lay it off half size, but make the scale itself do this and always think and talk of the full size dimensions.

The triangular scales, which are called architects' scales, have two reduced scales at each end of each edge except the edge which has sixteenths on it. Each of these scales is marked at

each end by a number, as 3, $1\frac{1}{2}$, $\frac{3}{4}$, $\frac{3}{8}$, etc., meaning that the scale so marked has 3″, or $1\frac{1}{2}$″, or $\frac{3}{8}$″, divided in the same manner that a foot rule is divided, viz.: into twelve parts and each of those parts subdivided into halves, quarters, and eighths. Only one space of 3″–$1\frac{1}{2}$″, etc., on each scale is divided off into subdivisions at each end of the ruler, but each division of 3″–$1\frac{1}{2}$″–$\frac{3}{4}$″, etc., length is marked with a number to correspond to the number of that division counting from the subdivided division. Fig. 1 (*A*) shows a scale of $1\frac{1}{2}$″ = 1 foot, which is an eighth size scale. One foot, $6\frac{3}{4}$″, is shown laid off on this scale. When taking dimensions from a scale, lay its edge along the line to be measured and mark the distance with a pencil or needle point. Never use the scale as a ruler for drawing lines. The scales commonly used for machine drawing are: Full size, half size, quarter size,

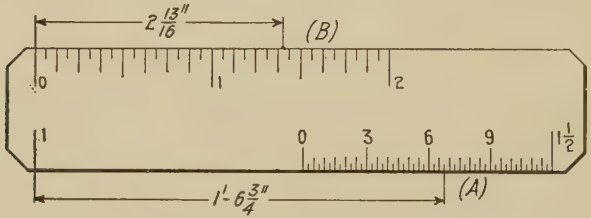

Fig. 1 (*A*).

and eighth size. The scale used should always be noted on the drawing, as indicated above or as follows: 6″ = 1′, 3″ = 1′, $1\frac{1}{2}$″ = 1′, 1″ = 1′, etc.

Use full size scale if possible or advisable, if not, use half size, quarter size, eighth size, twelfth size, etc. All of these reduced scales will be found on the triangular architect's scales commonly used in draughting offices. *All views of the same object* must be drawn to the *same scale.* Different objects may be drawn to different scales on the same sheet, but the scale should be noted in each case which differs from full size.

5. Blocking in. After locating the principal center lines of the views the outline is built up around them by putting in the principal lines in each view, then secondary lines. Draw straight lines first then the curves which join them. Circles can be put in *first* where they are *principal lines. Work all views of one object at the same time,* and divide the work into the

constructive and finishing stages, the former consisting of light lines, the latter of heavier lines over the light ones. The lines drawn during the second stage, the arrows, the dimensions, and printing will show more clearly and can be traced with less strain on the eyes if a softer drawing pencil (HHHH) is used than the one used (6H) during the first stage.

Use a *conical pencil point* for the finishing stage and do not sharpen it to a prick point when making arrows and figures.

The shaft coupling of Figs. 1 and 2 shows how the lines are drawn in the two stages and how arrows are made before putting in dimension numerals.

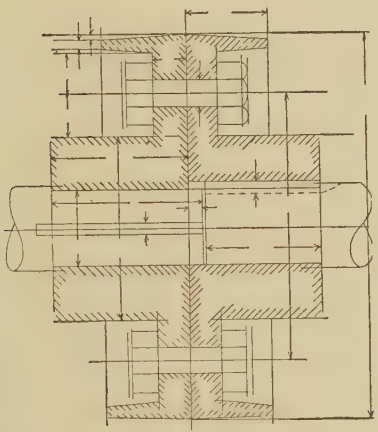

Pulley Coupling Pencil Layout

FIG. 1.

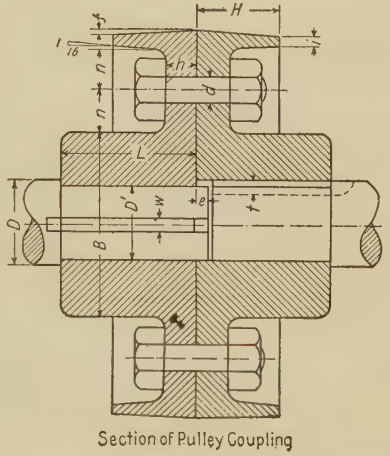

Section of Pulley Coupling

FIG. 2.

Dimension lines are *fine continuous* lines broken to allow the dimension to be inserted. The arrows touch the lines to which the dimension is measured. These may be lines of the drawing or extension lines drawn from them. See Fig. 3.

6. A *section* of an object is often shown instead of an outside view. It is obtained by a plane which cuts the object in such a direction that the section made shows the interior more clearly than the outside view taken from the same position. The material cut by the section plane is cross hatched or section lined by drawing parallel lines across it. These lines are drawn at 45° to the horizontal and from $\frac{1}{20}''$ to $\frac{1}{8}''$ apart, depending on the area

and scale of the section. Various combinations of light, heavy, and broken lines are often used to designate different materials, but there is no *universal* standard. The standard sections of the U. S. Navy Dept. are shown in Fig. 4, page 27. The safest way to indicate the material is by a note on the drawing giving the material of which each part is made.

Sections of parts of a machine cut by the same plane, whether of the same or of different materials, which touch, should have the section lines slant in opposite directions. (See section of pulley coupling, Fig. 2.)

When the scale of the drawing is much smaller than full size and the material cut by the section plane is thin, as the

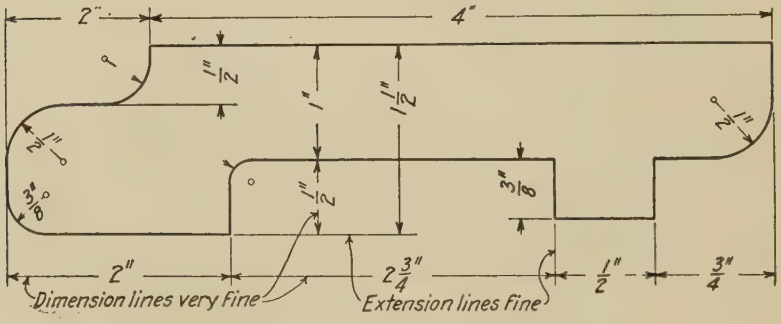

Fig. 3.—Specimen Drawing.

plates of a boiler or tank, the section is often blacked in as shown in Fig. 5.

Breaks are often made in a long bar to reduce its length on the drawing as well as to indicate its general shape. Such breaks as are conventional and standard are shown below in Fig. 6. Cylinders are generally represented as in (*A*) and (*B*) and pipes at (*A*), (*B*), and (*C*).

7. It is not customary to section every part lying in and cut by the plane of a section. The exceptions which are not section lined are bolts, bolt heads, and nuts, screws of all kinds, shafts, keys, rivets, oil cups, pipes and all cylinders whose axes lie *in* the section plane. If the section plane cuts the axes of the parts mentioned above, at right angles, then the part cut is section lined. Arms of pulleys and gears are not sectioned when the section plane *contains* the axis of the arm. Keys and

gibs are section lined only when cut by planes perpendicular to their greatest length.

8. Arrows on drawings should be put in as soon as the dimension and extension lines have been drawn. Make arrows by two strokes *towards* the point. Make them *sharp* pointed and *black*, with the barbs close to the shank and not spread out, and use a *cone* pointed pencil. The arrows point *away* from the dimension numeral except in crowded spaces when they point towards it.

Arrows always *touch* the extension lines on the outside as in (*D*), Fig. 7, and in Fig. 2 of the pulley coupling, or on the inside as in (*A*), (*B*), (*C*), of Fig. 7.

9. Dimension numerals are put in after the arrows are made. They should be clearly made and rather blacker than other lines of the drawing. See Fig. 8.

The style of numeral should be open and made as shown in Plate 2 last line, or in Fig. 9

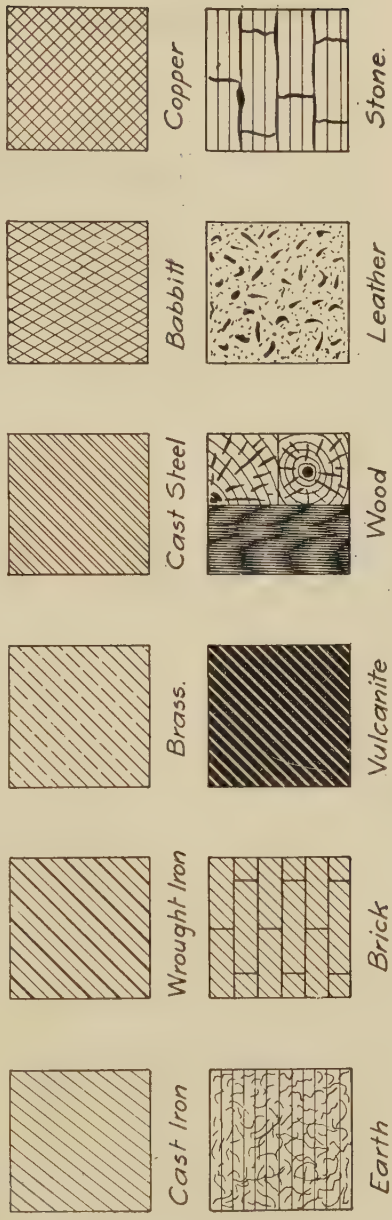

Standard Cross Sections of U.S. Navy Department.

FIG. 4.

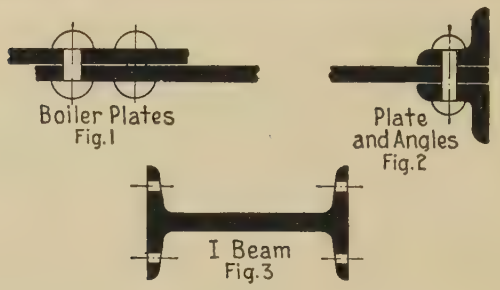

FIG. 5.

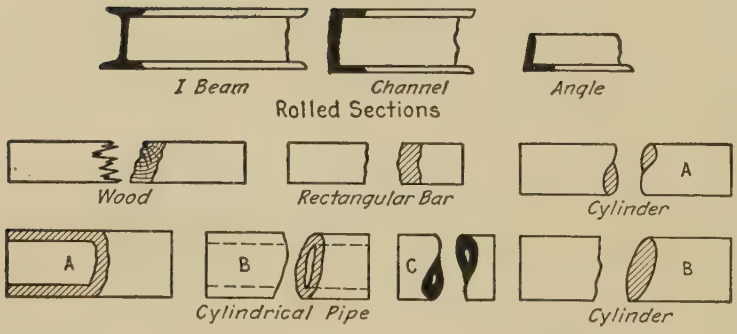

FIG. 6.—Conventional Breaks.

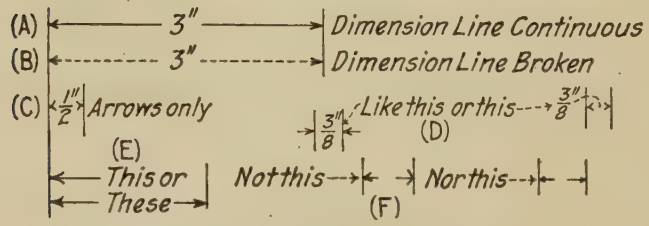

FIG. 7.—Arrows and Dimension Lines.

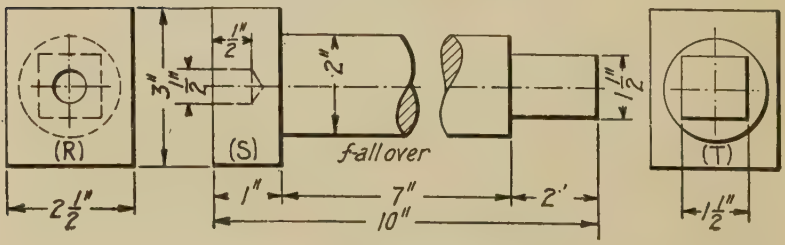

FIG. 8.—Sample Drawing.

line (*B*). On a full sized drawing the numerals should be about $\frac{1}{8}''$ high and fractions about $\frac{3}{16}''$. All numerals for horizontal or vertical dimensions must be placed to *read from the bottom or right hand side of the drawing* when the person reading is facing the bottom or right hand edge of the sheet respectively.

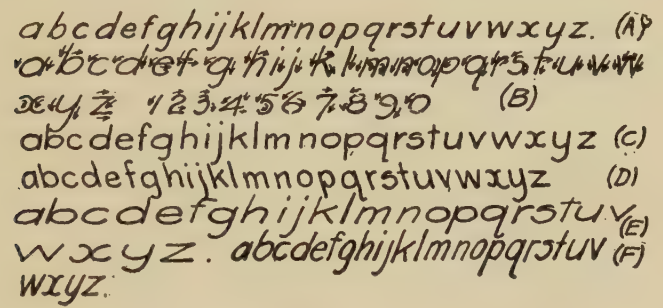

Fig. 9.

Oblique lines should be dimensioned to read from one or the other of these two edges. Fig. 10 shows how to place the figures for the lines in various positions which occur on drawings.

10. The *dimensions* placed on a drawing should be expressed in inches and *common* or *vulgar fractions* up to 24″ and in feet and inches above that. When fractions of an inch are used the denominators are usually multiples of 2, 4, and 8, as $\frac{1}{2}$, $\frac{1}{4}$, $\frac{1}{8}$, $\frac{1}{16}$, $\frac{1}{32}$, $\frac{1}{64}$. The numerator is always a *smaller* number than the denominator. The division line between numerator and denominator must *always* have the *same direction* as the *dimension* line belonging to the fraction, as $\frac{3}{4}$, $\frac{3}{4}$, $\frac{3}{4}$, *never* 3/4, $\frac{3}{4}$. The fraction should always be reduced to its lowest terms, that is, $\frac{14}{16}$ should be $\frac{7}{8}$ and $\frac{6}{16}$ be $\frac{3}{8}$. The dimensions on a drawing bear no relation whatever to the scale of the drawing. They are *always full size* and *nothing but full size dimensions are ever spoken of or ever written.*

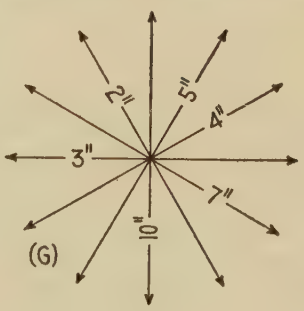

Fig. 10.

When dimensions are expressed in feet and inches a dash is made between the feet number and the inches number, as 4′–6½″ and if

there are no inches to be expressed a cipher is made in the inch place as 6′–0″. Avoid fractional numbers in long distance measurements. If the distance between two principal centers should happen to be 6′–7$\frac{11}{16}$″ very likely 6′–7$\frac{3}{4}$″ would answer as well, or even 6′–8″ might be used, but if it is the sum of several dimensions it must not be changed. *Dimensions* are *always placed* on *dimension lines, never* on a line of the drawing outline.

11. Special forms of dimensions are shown in Fig. 11. Numerals which are located on surfaces crossed by section lines, are placed in spaces and are not crossed by the section lines. See the coupling of Fig. 2. The longest dimensions of an object should be placed farthest from the object, the shorter ones nearest to it, as in Fig. 8.

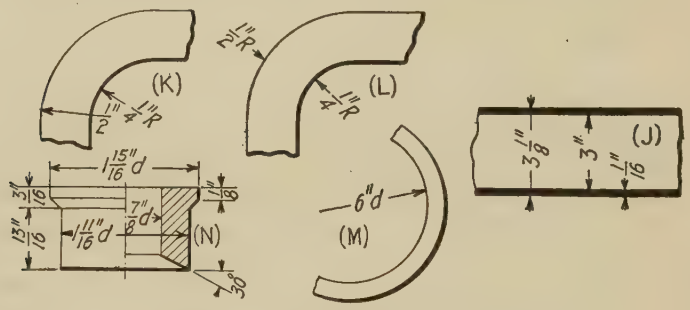

Fig. 11.—Special Dimensions.

Diameters of circles are usually given instead of radii. If the radius only can be shown when a diameter is wanted, the diameter numeral is given with a small (*d*) written after it and one arrow head is shown touching the part of the circle which is visible, as in (*M*) Fig. 11. In a view half in section the dimension is given as shown at (*N*) $\frac{7}{8}$″*d*, and 1$\frac{11}{16}$″*d*. Arcs of circles have their radii given as at (*L*) or at (*K*). On pencil drawings a small free-hand circle is made around the center of the arc to assist the tracer in finding it. When a tube is shown in section as at (*J*) a question might arise as to whether the arrows touched the inside or outside of the tube. This is obviated by placing the arrows for the outside dimension on the outside of the tube those for the inside on the inside.

12. Holes in circular flanges are located on a circle called the bolt circle whose diameter is always given. The distance

from this circle to the outside of the flange should also be given, especially if the flange is a turned one. (*P*) of Fig. 12 shows such a flange. (*Q*) of the same figure shows how holes are located in a plate by giving the distances from adjacent edges to the

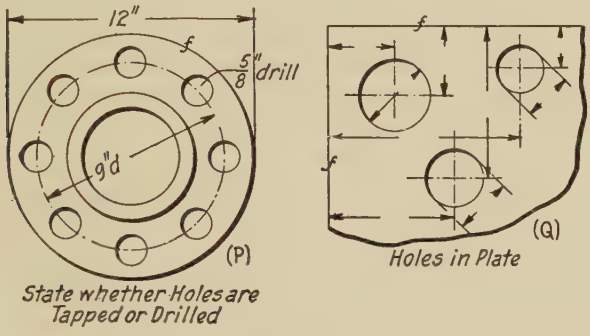

Fig. 12.

centers of the holes. Whenever it is necessary to express dimensions for extreme accuracy as in thousandths of an inch, they are expressed in decimals, as 1".3278. For cut gears the outside diameters are often expressed in this way, also on work which is turned or ground either for force, shrink, or running fits.

In the following Fig. 13, is shown a working drawing of a crank shaft for a triplex power pump.

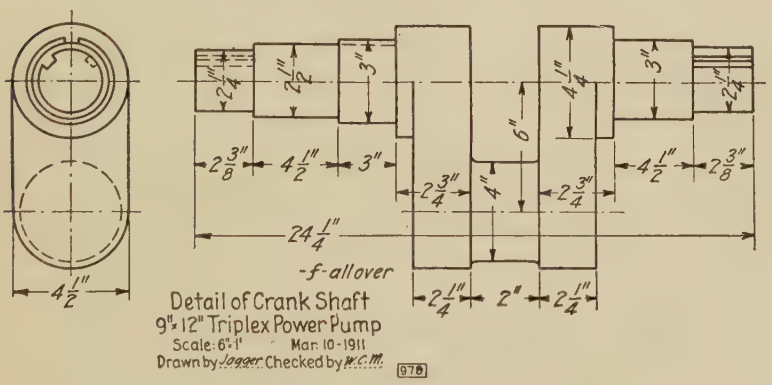

Fig. 13.—Sample Drawing.

13. *Explanatory notes* are placed on a drawing to supplement the information given by the dimensioned outline of the

object. They comprise such information as the name of the object, the number wanted, the material of which it is made, the kind of finish desired, whether holes are to be drilled, bored, tapped, or reamed, or if cylinders are turned, ground, polished, etc. The weight of an object or the area of an irregular opening or a note indicating certain assumptions, is often very useful information to one who is called upon to pass on a drawing.

14. Abbreviations in common use on drawings are given below.

MATERIALS:

C. I. = cast iron,
W. I. = wrought iron,
St. = mild steel,
T. S. = tool steel,
M. S. = machinery steel,
S. C. = steel castings,
Med. S. = medium steel,
Mal. I. = malleable iron,
Bz. = bronze,
Br. = brass,
Bab. = babbitt.

OTHER ABBREVIATIONS:

Pcs. = pieces,
Pi. = pitch or threads per inch,
ft. = feet,
in. = inch,
ins. = inches,
R = Radius,
r = radius,
Thds. = threads,
D. P. = diametral pitch,
P. D. = pitch diameter,
f = finish,
′ = feet,
″ = inches,
R.P.M. = revolutions per minute,
m/m = millimeters,
m = meters,
U.S. St. = United States Standard.
Hd. = head,
B.W. G. = Birmingham Wire Gauge,
C. to C. = center to center,
C. to E. = center to end.
Sq. = square,
Hex. = hexagonal,
Oct. = octagonal,
D, d, or diam. = diameter,
lg. = long,
cyl. = cylinder,
T = teeth,
□″ = square inch,
□′ = square feet,
° = degrees,
H. P. = horse-power,
K. W. = kilowatts,
cm. = centimeters,
B. & S. = Brown & Sharpe,
Sc. = screw,
Std. = standard,
A. S. & W. = American Steel & Wire Gauge.

SHOP OPERATIONS are marked as follows:

$\frac{3}{4}$″ pipe tap = thread this hole to fit a $\frac{3}{4}$″ pipe thread,
$\frac{1}{2}$″ tap = thread this hole to fit a $\frac{1}{2}$″ screw thread,
$\frac{7}{8}$″ tap–10 = thread this hole for a $\frac{7}{8}$″ bolt having 10 threads per inch,
$\frac{3}{4}$″ drill = drill this hole $\frac{3}{4}$″ diameter,
3″ bore = bore this hole to 3″ diameter,
4″ turn = turn this cyl. to 4″ diameter,
1″ core = use a core 1″ diam. for this hole.

15. A *finish* mark is used on a drawing to indicate a surface which is to be machined. It consists of a lower case *f* placed on the line which shows the *edge* view of the surface to be finished. The cross bar of the *f* makes a slight angle with this line as shown in Fig. 12 preceding. The degree of finish desired is expressed by the word scrape, buff, polish, grind, etc., placed parallel to the line denoting the surface. If the object is entirely machined the *f* marks are omitted and a note is placed below the object, viz., *–f – all over,* as in Fig. 13.

The allowance required on the pattern or forging for material which is to be cut away in finishing is left to the judgment of the pattern maker or blacksmith. The dimensions given on the drawing are those of the finished object.

16. Titles. Every drawing sheet should have a *title* on it containing more or less information regarding the object or objects thereon delineated. This title is nearly always placed in the lower *right hand corner* of the sheet to facilitate finding the sheet when placed in a drawer with other drawings. It should contain the following matter:

1. The subject matter on the sheet,
2. The person or company for whom the drawing was made,
3. The scale of the drawing,
4. The date of completion of the drawing,
5. The name of the draughtsman,
6. The name of the person who checks or approves the work,
7. The filing number of the drawing,
8. The number of the sheet and the total number of sheets in the set.

As the drawings of an elementary character in a school or college are made for the school, it is advisable to substitute the school name for No. 2, of the title. The remainder of the title is approximately the same as that above.

In the layout of a sheet the space necessary for a title should be determined and the views placed so as not to encroach on it. A space of three inches by five inches ought to be sufficient for a title on any one of the plates in this machine drawing work. This space will be in the lower right hand corner of all sheets just inside the border line. A *border line* will be drawn one-half inch inside the edges of the drawing paper. It is not necessary to make this line elaborate on machine drawings, therefore a

single continuous line will be sufficient. A few titles are shown on Pl. 1, as well as the form of title recommended for students in the Sheffield Scientific School.

17. A shop bill or bill of material is often placed on the drawing instead of on a separate sheet. A bill of this sort gives the name of each part of the machine which is represented on the sheet, the material it is made of, the number of parts of each kind required to help make a complete machine, the mark of each part, and any data conveniently expressed, as the length of a bolt, its grip, location in the machine, etc.

Such a bill for a cast iron shaft coupling might read as follows:

BILL OF MATERIAL

Pcs.	Name of Part	Material.	Mark.	Dimensions.	Remarks.
2	Flanges	C. I.	(1) or F		
1	Sunk key	Steel	(2) or K	$\frac{1}{2}''$ wide, $\frac{1}{4}''$thk., $4''$ lg.	
1	Sunk key	Steel	(3) or K_1	$\frac{1}{2}''$ wide, $\frac{1}{4}''$ thk., $3\frac{3}{4}''$ lg.	
4	Bolts (U.S.St.)	W. I.	Hex. hd. Hex. nut	$\frac{3}{4}''$ diam., $2''$ grip, $2\frac{3}{4}''$ lg	

For a screw cap stuffing box:

BILL OF MATERIAL

No. of Pcs.	Name of Part.	Material.	Mark.	Remarks.	Finish.
1	Screw cap	Brass	C_1	Casting	
1	Gland	Brass	F	Casting	
1	Casing	Brass	A	Casting	

18. Lettering and Printing. A drawing will not attract favorable attention unless it has good printing or lettering on it. It may be inaccurate or poorly drawn, but if it is well lettered the untrained eye unconsciously judges it by this. On the other hand a drawing may be accurate and the lines well made yet be condemned by careless or unsightly lettering.

Drawings for machine shops, pattern shops, forge shops, etc., do not require such elaborate titles as one finds on maps, nor does the lettering need to be made with instruments of precision. Free-hand printing, if well made, is good enough for

Title suitible for a school drawing.

3" Flanged Shaft Coupling

M.E. Dept. Sheffield Scientific School.

Yale University

Scale half size ——— Nov 20, 1902

Drawn by D. Swift. — Class of 1912 M.E.

Approved by m. — Pl. 4 of 20 Pls.

DETAIL
of
ARMATURE SHAFT
for
30 K.W. D.C. Generator.

Westinghouse Electric and Mfg. Co.

Scale 6" = 1' ——— Jan. 1 1912.

Drawn by ---------- Checked by ----

Approved by -------- 10742

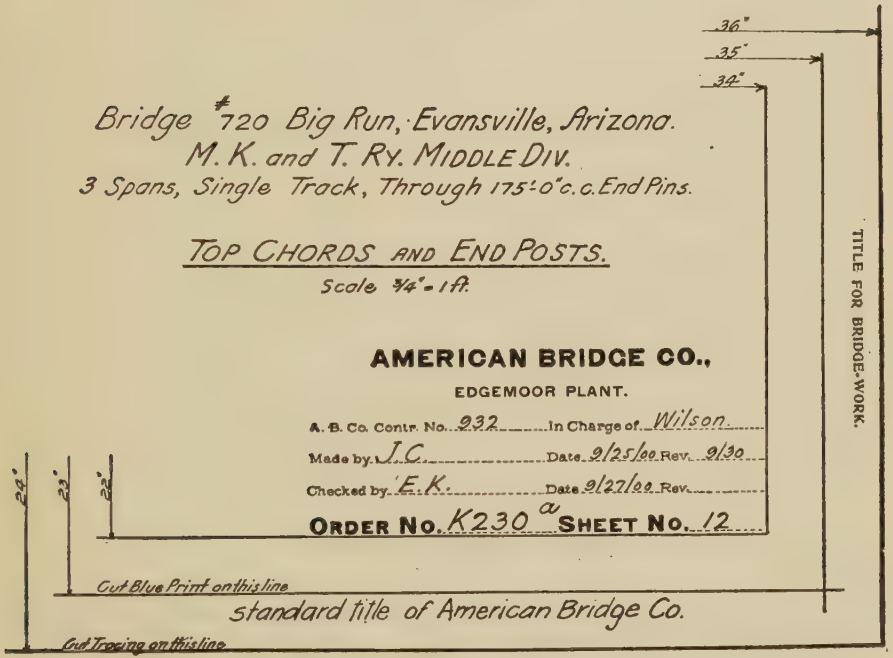
36"
35"
34"
Bridge # 720 Big Run, Evansville, Arizona.
M. K. and T. Ry. Middle Div.
3 Spans, Single Track, Through 175'-0" c. c. End Pins.
Top Chords and End Posts.
Scale 3/4" = 1 ft.
AMERICAN BRIDGE CO.,
EDGEMOOR PLANT.
A. B. Co. Contr. No. 932 In Charge of Wilson.
Made by J.C. Date 9/25/00 Rev. 9/30
Checked by E.K. Date 9/27/00 Rev.
ORDER No. K230 a SHEET No. 12
24'
23'
22'
Cut Blue Print on this line
Standard title of American Bridge Co.
Cut Tracing on this line
TITLE FOR BRIDGE-WORK.

SIDE ELEVATION
OF
CARRIAGE FOR SIX INCH B·L·RIFLE
DRAWN UNDER THE DIRECTION OF COL·C·W·LARNED
BY
CADET Q·R·SMITHER.

Scale, 1:8 Title used at U.S. Military Academy Dec. 1903.

PLATE 1.—TITLES.

notes and titles on shop drawings, besides taking much less time and skill to make. The following system is recommended for beginners and will give good results with a little practice. It applies to lower case letters. The curved letters are based on the letter (*o*) which is made with *one* stroke of the pen or pencil as in making a cipher. The other lines of this system are either horizontal, vertical or slightly inclined from the vertical.

The body of certain letters as *a–b–d–g–p–q* is a complete cipher with a straight line added for *a–b–d–p* and straight line ending in a curve for *g* and *q*. The *c–e* and *x* are incomplete ciphers the (*e*) having a horizontal line added. The *x* is composed of two incomplete ciphers touching at their sides with openings opposite their common tangent point. The letters *n–m–r–s–u* and *y* are modified ciphers with straight lines added.

The other letters *f–i–j–k–l–t–v–w–z* are straight lines to which we add curves in *f* and *j*. No other " tails " or lines are added at top or bottom.

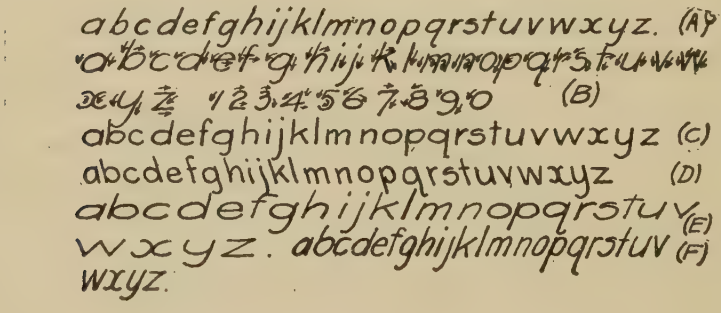

FIG. 14.

Fig. 14 (*A*) and (*B*) show these letters in the finished state as well as in the process of making. This alphabet may easily be varied by changing the slope of the letter as in (*C*) which is vertical and (*D*) which is back hand, or by changing the *normal* spacing of the letters to the *extended* spacing as in (*E*) or the *compressed* as in (*F*).

19. The capital letters shown at (*E*) and (*F*) on Plate 2, give an idea of the Gothic type suitable for use with the above system of lower case letters. The inclination with the vertical is about 3 to 8. The other styles of lettering on Plate 2 are more fancy and more frequently found on architectural drawings than on

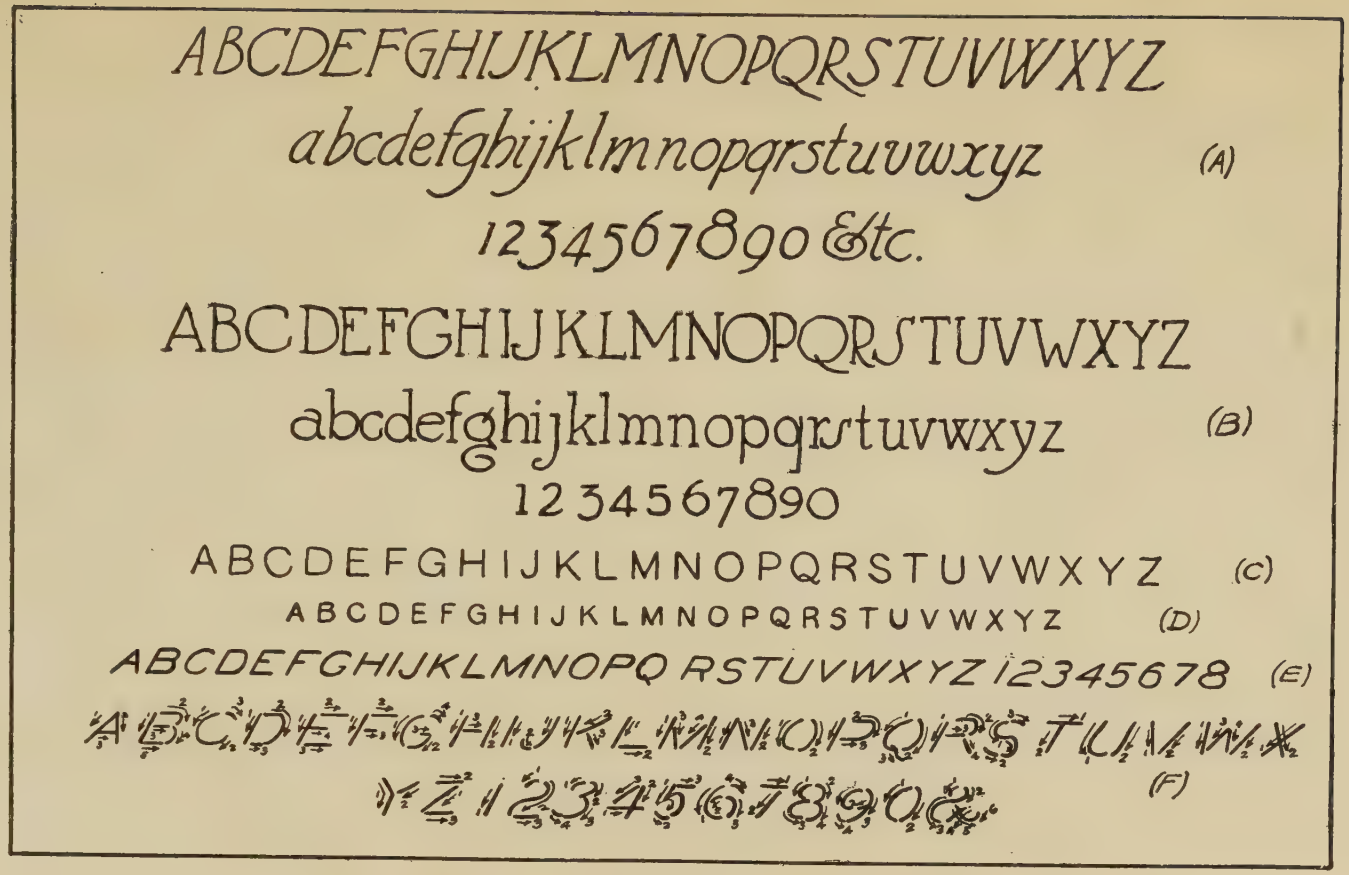
ABCDEFGHIJKLMNOPQRSTUVWXYZ
abcdefghijklmnopqrstuvwxyz
(A)
1234567890 &tc.
ABCDEFGHIJKLMNOPQRSTUVWXYZ
abcdefghijklmnopqrstuvwxyz
(B)
1234567890
ABCDEFGHIJKLMNOPQRSTUVWXYZ
(C)
ABCDEFGHIJKLMNOPQRSTUVWXYZ
(D)
ABCDEFGHIJKLMNOPQ RSTUVWXYZ 12345678
(E)
(F)

PLATE 2.

machine drawings. (*A*) and (*B*) are especially used on work of an architectural type. (*C*) and (*D*) are used in titles and notes where lower case letters are not desired, *all* the letters being *small capitals.*

Attention is called to the *figures* in alphabet (*A*) and (*F*) and the method indicated for making the lines which compose them. These are numbered in the order in which they are made.

20. The beginner is recommended always to draw *limiting* lines or *guide* lines with the T-square for the tops and bottoms of *all* letters and *especially* for *lower case letters.* These lines should be drawn so fine, with the pencil, as scarcely to be visible, otherwise they will mar the appearance of the printing if left on the drawing.

Lower case letters should be from $\frac{3}{32}''$ to $\frac{1}{8}''$ high and the capitals which accompany them about $\frac{9}{64}''$ high to $\frac{3}{16}''$, depending on the scale of the drawing and the character or importance of the note. Use a *conically pointed pencil for all lettering* and not of too hard a grade, 2H to 4H being hard enough. Too sharp a point is not advisable. Beginners will find it much easier to make good looking printing if they do not attempt the vertical style, for it very difficult to make all straight lines vertical and any line out of the vertical is at once detected.

21. In the making of a title certain words are more important than others and require larger letters to give them more prominence. Usually the name of *the object delineated on the sheet of drawing* is the most important portion of a title. The scale and date being of least importance are in the smallest type.

Intermediate sized letters would be used for other information such as name of machine of which the object drawn was a component part, name of concern building the machine, name of draughtsman, chief engineer, checker, etc. As a means of giving prominence to a word, wide spacing is often employed, also large or black faced letters. As an illustration take a title composed of the following:

Detail of armature shaft for 30 K.W. generator for the Westinghouse Electric and Mfg. Co. Scale full size. Jan. 1, 1911, drawn by.....traced by.....approved by..... sheet...of....sheets, No. 10,430. This will be found on Plate 1.

The student who wishes to study the subject of lettering still more is advised to consult such books on lettering

as Reinhardt's "Freehand Lettering," Daniell's "Freehand Lettering," and Jacoby's Textbook on Plain Lettering, in which the spacing of letters, arrangement of subject, width of letters, styles of alphabets, etc., are treated at length. In many large manufacturing plants the titles are printed or stamped on the drawings and the draughtsman fills out the blank spaces as needed for the special sheets.

22. Shade Lines are used to make the object drawn appear in relief or stand out from the paper. Shade lines are heavier than the ordinary lines of an unshaded drawing while the lines not shaded are lighter to produce more of a contrast without requiring excessively heavy shade lines. Shade lines are the dividing lines between the lighted surfaces and shaded surfaces of the object when the parallel rays of light come from above the upper left hand corner of the drawing board at an angle of 45° with the plane of the paper. Each view is shaded independently of the others but the light rays come from the same direction always. All surfaces in the plane of the paper or parallel to this plane are considered as lighted. Vertical surfaces are either lighted or dark depending on whether the rays strike them or not. An inclined surface may or may not be lighted, depending on either the angle of its slope with the plane of the paper or whether it is cut off from the light by an intervening part of the object.

One rule for shading commonly used is to shade the *lower* and *right* hand *edges* of a surface.

The following Fig. 15 will illustrate the use of shade lines to represent depressions (*B* and *D*) and projections (*A* and *C*). A circle is shaded after drawing a light circle, by moving the compass point along a 45° line *xy* away from the center of the circle a distance equal to the thickness of shaded circle desired. Without changing the radius draw a semi-circle to join the original circle at *z* and *z*, Fig. 15.

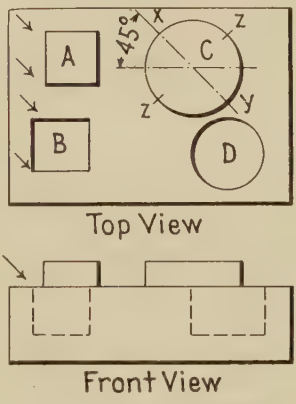

Fig. 15.—Shade Lines.

The shade lines of a hole are made heavy outside the hole

in order to preserve the original diameter and enable the dimension to be given inside. The opposite is true if the circle represents a cylinder.

23. Bolt heads and nuts are shaded in various ways, but Fig. 16 represents average practice in this respect. Other plates such as the straight arm pulley, eccentric and strap, cross-head end of connecting rod, and bearing box, are examples of shading. Detail drawings are not shaded as a rule but assembled machines or "picture" drawings are often treated in this manner. It takes more time and often is not worth the trouble, although it greatly enhances the clearness of a drawing in the eyes of persons who cannot readily read drawings made by orthographic projection.

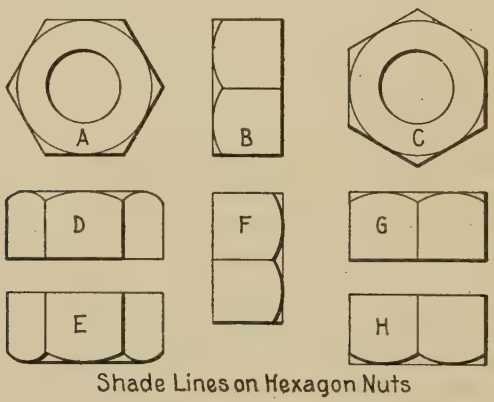

FIG. 16.

24. Tracings. Whenever it is necessary to duplicate a drawing which is drawn in pencil it is the custom to use some form of photo reproduction, which requires an original drawing to consist of opaque lines on a transparent background or the reverse. The background material employed is cloth or paper, which has been rendered transparent by a preparation of wax or paraffin. A drawing on such paper or cloth is made with India ink and is called a *tracing*, because it is generally made by placing the cloth over another drawing and tracing on it the lines which show through from the drawing beneath. As it is sometimes difficult to see through this transparent paper or cloth it is sometimes advantageous to make a pencil drawing directly on

the tracing cloth and then ink over the pencil lines. It makes it easier on the eyes and saves paper.

To obtain copies from a tracing, it is placed in a frame, in contact with sensitized paper and exposed to the sunlight or strong electric light for several minutes. The sensitized paper is then washed in water or some chemical solution which dissolves the chemical in the paper which was protected from the light rays by the lines on the tracing and we get white lines on blue ground or black ground. These are known as *blue prints* or *black prints*, and serve for shop or field use in engineering work.

The prime requisites for a tracing are clearness and opaqueness of outline. Light thin lines on a tracing produce faint lines on a blue print and may even disappear if the exposure to the light rays is too long. A poor tracing will never give a blue print of as good quality as the tracing, always worse.

25. In the making of a tracing, always observe the following points and rules:

Tracing cloth is always used in preference to tracing paper because it is tougher and endures rough handling.

It comes in rolls and always has a tendency to curl up when unrolled and cut in sheets. This is due to the rolling in a roll and to the fact that the transparent substance makes it curl up on that side on which it has been applied, called the smooth side. If the inking is done on the smooth side, the tendency to curl is still further increased, but if the dull side is used the tendency to curl is diminished and the tracing lies flat.

Pencil lines are easily made on the dull side, while on the smooth side it is almost impossible to make them. This accounts for the use of the dull side in all shops where the tracings have to be "checked," or corrected. The only advantage the smooth side has over the dull side is the doubtful one of lending itself better to erasures. Inking is more difficult as the ink is more apt to run on the smooth side. At any rate the dull side is recommended to all beginners, especially in technical schools.

26. The tracing cloth is stretched on the drawing board over the drawing to be traced, dull side up. Place a thumb tack in the middle of the top edge on large tracings and run the hand down over the cloth to the middle of the bottom edge where another tack is placed. Then place a tack in each corner after first sliding the hand towards the corner from one of the center

tacks. The cloth should be large enough for a margin outside the border line of the pencil drawing.

The cloth is now treated to a sprinkling of chalk or magnesia, which is rubbed in with the fingers or a cloth to remove all oily spots which might prevent the even distribution of the ink. This powder is carefully wiped off with a cloth, leaving the surface free from powder and ready to receive the ink. Do not use too much powder. As tracing cloth does not take ink in the same manner as drawing paper it is recommended to try the drawing pen on a scrap of tracing cloth before beginning on the work of tracing. Do not aim to save ink on a tracing but make heavy lines without attempting to shade them. Draw large circles first, small circles, irregular curves, all in some systematic manner, as from the top of the sheet downwards or from left to right. Do not ink in circles or curves on more views than you expect to complete on the same day, for tracing cloth has a way of absorbing moisture which makes it expand in a disconcerting manner, throwing centers and lines out of true with the drawing beneath.

Horizontal lines are then drawn with the T-square, working down from the top of the sheet, then vertical lines are drawn with the triangle by moving it along the T-square blade from left to right. Draw straight lines *towards* the curves they are to join. Ink in inclined lines in all directions and then finish up any lines relating to the outline of the object such as breaks or lines to be drawn with a writing pen.

27. We now come to the lines on a drawing other than the lines bounding the object. These are *center lines*, *dimension lines*, and *extension lines*, all drawn with a straight line drawing pen. They can be drawn either with red ink or with black ink. Drawn with *red* ink they are continuous, that is, not broken. When drawn with *black* ink they are made as follows: *Center lines* are *very fine* and are continuous or dot and dash lines. The latter lines are composed of dots and dashes from three-quarters to one inch long. *Dimension lines* are fine light lines continuous or broken. *Extension lines* are light and continuous, as fine as a pen will draw. After these lines are all drawn the *arrows* are put in with a *writing pen* and black *India* ink. Then put in the dimensions also in black and with a writing pen. Notes and printed directions and titles are then made,

followed by the section lining and the border line. Section lines are fine, black and continuous. Sometimes in place of section lining the area to be shown in section is darkened by rubbing black pencil or colored crayon on it which gives a light blue effect when this surface is reproduced on a blue print.

A tracing can be cleaned of dirt and pencil lines by using a sponge rubber, art gum, or a cloth dampened with gasoline. The ink lines are not affected by these processes.

Draw all ink lines from left to right and do not press too hard against the ruling edge, as this closes the nibs of the pen and changes the width of the line.

28. Erasing from a tracing may be done most satisfactorily by using an ink eraser and sliding a celluloid triangle underneath the tracing cloth at the point where the eraser is used. If a continuous line is to be made broken a sharp knife can be used instead of an eraser for making the spaces in the continuous line. After using a knife, however, the glazed surface must be restored as nearly as possible by rubbing the roughened spots with pumice powder, pumice stone, soapstone crayon, or some smooth hard substance like the end of a pocket knife. This prevents dirt from collecting on the erased surface, and enables a new ink line to be drawn over it without spreading.

Before printing on tracing cloth *always draw light pencil guide lines* for the tops and bottoms of all letters, even if there are guide lines on the pencil drawing underneath. Do not try to trace the *freehand* printing of a pencil drawing.

The *writing pens* used should have rather stiff nibs and the stroke of the pen when making the letters should be made with a constant light pressure on the cloth, in order to avoid changing the width of the line during the stroke.

Do not use a fine pointed pen. Gillott's 404 or a Lady Falcon are good pens for ordinary notes and figures. A Falcon or ball pointed pen will be found more suitable for freehand title printing. An old pen works better than a new one because the nibs become slightly separated by long use and the ink flows better. Too much ink on a pen will cause a blot on the tracing, therefore it is always better to shake a pen after dipping it in the ink bottle, to shake off the surplus ink. Wipe a pen often with a good pen wiper of cloth, for ink will not flow freely unless a pen is clean.

29. A *résumé* of the order of operations in tracing is as follows:

(*a*) Preparing surface of cloth. (Art. 26.)

(*b*) Inking circles, arcs, irregular curves. (Arts. 26–27.)

(*c*) Inking horizontal lines with T square and vertical lines with triangle (work from top to bottom and left to right).

(*d*) Inking of inclined lines, shade lines (if desired). (Art. 27.)

(*e*) Center lines, dimension lines, extension lines. (Art. 27.)

(*f*) Arrows, figures, notes, freehand pen work, title. (Art. 27.)

(*g*) Section lining border lines, trimming, cleaning. (Art. 27.)

Ink in only as many views as can be completed on the same day.

30. Checking. When a drawing is completed, it should be checked, either by the draughtsman himself, or preferably by some one especially appointed for this work. If it is necessary for the draughtsman to check his own drawing a few points especially should be borne in mind. They are as follows:

1. VIEWS. Be sure that the views completely represent the object to be made and that they are properly arranged with regard to each other.

2. NOTES. See that these give information not supplied by the drawing of the object such as: nature of material, pieces wanted, finish of surfaces, kinds of holes, etc.

3. DIMENSIONS. In checking, dimensions may be scaled to check accuracy of drawing, but should be verified by computation. In checking over-all dimensions, add together the subdivisions which compose them. Dimensions of parts which go together, such as a shaft and pulley, should be compared. Be sure that all dimensions which each department of the shop may need are on the drawing. A workman is *never* allowed to scale or calculate a missing dimension. See that the same dimension is not repeated on two or more views of the same object.

4. FINISH. See that proper finish marks are clearly indicated, and the character of finish properly and fully stated.

5. STANDARDS. Be sure that the sizes and forms of bolts, screws, and other standardized parts, conform to the accepted standards of the same.

6. TITLE. See that the title is complete, yet concise, and contains all the necessary details that should be recorded under this head.

7. After corrections have been made the initials of the checker should be placed in the title space.

CHAPTER II

FASTENINGS—RIVETS

31. FASTENINGS are necessary for holding in place the component parts of a machine.

It may be that none of these parts will ever require moving so that fastenings of a permanent character can be used. The most common permanent fastenings are rivets. They are used to fasten together the plates of a boiler, or a tank, or the iron beams of a bridge, or of a building, or of a roof truss. They are of wrought iron or steel. A rivet is made by upsetting the end of a cylindrical iron or steel bar to form a head and then cutting off the bar at some distance from the head. The rivet is then heated, pushed through the holes in the plates to be connected and another head or point formed on the opposite end. During the process of forming the new head the rivet is squeezed into the hole in the plates and completely fills it. The new head also presses the plates tightly against the first formed head. The new head is formed by a riveting machine or by hand hammers. The four common forms of heads are shown below in Fig. 17.

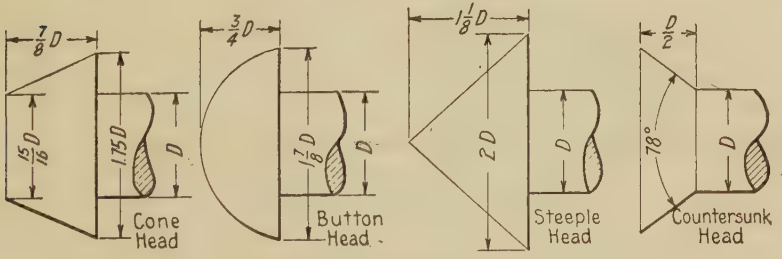

FIG. 17.—Rivet Heads.

32. The length of a rivet is measured from the under side of the head to the end of the shank, before riveting. This length

is equal to the combined thickness of all the plates to be connected (called the grip) plus enough more to provide the material necessary for the new head and for filling the rivet hole, which is made $\frac{1}{16}''$ larger than the rivet.

In boiler and tank riveting all four kinds of heads are used, but in riveting structural ironwork the button and countersunk heads are the only ones used. The conventional represen-

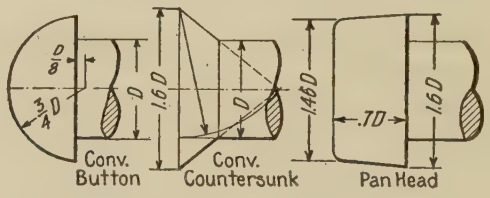

Fig. 18.—Conventional Rivet Heads.

tation of these two is shown above in Fig. 18. A pan head is also shown. Fig. 19 is a scale for obtaining the dimensions of rivet heads.

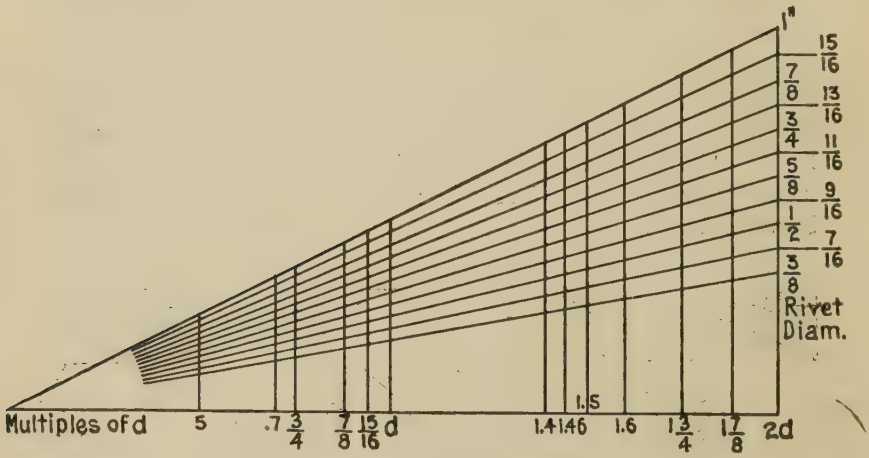

Fig. 19.—Scale for Rivet Head Dimensions.

33. The plates which are joined by rivets may overlap or touch at the edges. In the first case the joint is called a lap joint, in the second case a butt joint.

Lap joints have one or two rows of rivets on lines parallel to the edges of the plates. The lines are called gauge lines.

The distance apart of the rivets on one of the lines is called the pitch, denoted by P in the following figures. A joint with one row of rivets is called a single riveted joint, with two rows a double riveted joint, and with three rows a triple riveted joint.

If two of the rivets in parallel rows in a double or triple riveted joint are on a line perpendicular to the line of the joint, the joint is a chain riveted joint. If the rivets in one row are placed opposite the spaces in another row they are staggered.

Butt joints need one or two cover plates to connect the main plates. In boiler work two cover plates are used, the inner one sometimes being wider than the outer one. Riveted joints may be classed as follows:

Lap { Single / Double } Riveting. Arrangement of rivets { Chain / Staggered.

Butt { One cover pl. / Two cover pls. } { Single / Double / Triple } Riveting. Arrangement of rivets { Chain / Staggered.

34. In the examples, shown in Figs. 21, 22, 23, for drawing purposes, the following letters and formulae will be used for boiler joints only.

T = thickness of plates to be joined.
T_1 = thickness of cover plate when one is used = $1\frac{1}{8}T$.
T_2 = thickness of cover plate when two are used = $\frac{5}{8}T$.
d = diam. of rivet hole = $K\sqrt{T} = \sqrt{K^2T}$.
D = diam. of rivet (usually $\frac{1}{16}''$ less than d).
K = variable depending on kind of joint = 1.5 for single and double lap joints = 1.3 for butt joint with two cover plates.
P = pitch of rivets measured along the gauge line.
P_1 = the diagonal distance between rivets on different gauge lines = $0.6(P-d)+d$ or $\frac{2}{3}P+\frac{d}{3}$ (Kennedy).
G = grip of rivet.
E = $P-d$ =

Fig. 20 is a diagram for obtaining the diameter of rivet hole when the thickness of plate (t) is known and the value of (K) is either 1.5 or 1.3, depending on kind of joint.

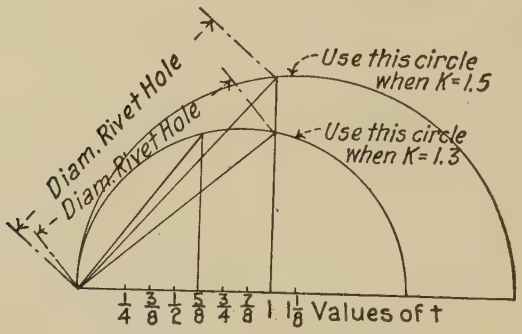

FIG. 20.—Diagram for Rivet Hole Diameters, $d = \sqrt{K^2 t}$.

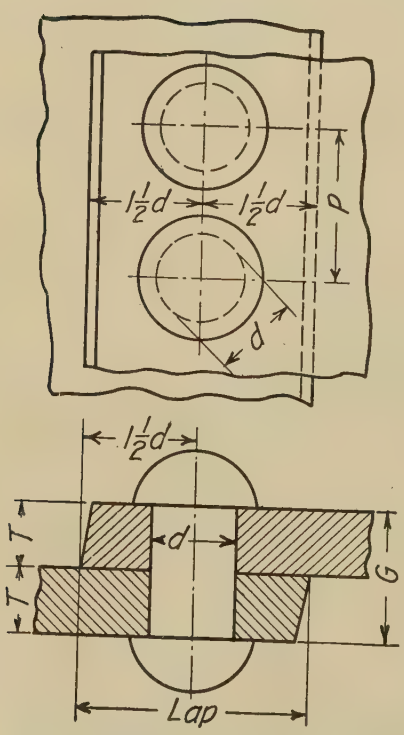

FIG. 21.—Single Riveted Lap Joint.

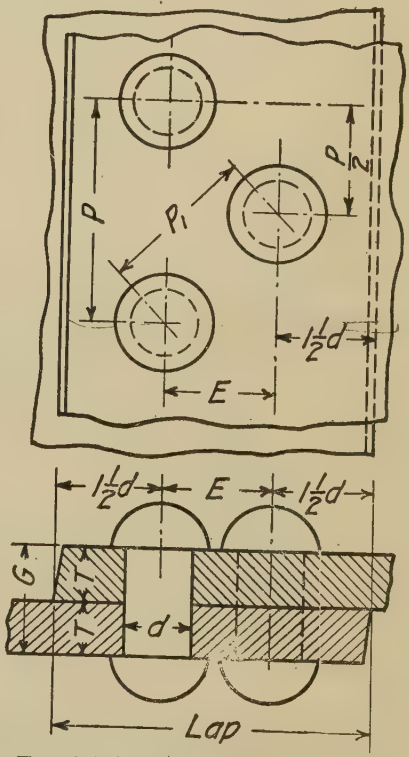

FIG. 22.—Staggered Double Riveted Lap Joint.

VALUES OF $(P-d)''$ FOR DIFFERENT THICKNESSES OF PLATE AND VARIOUS PRESSURES (b)

T, ins.	$b=120$	$b=150$	$b=225$
$\frac{1}{4}$	2.53	2.39	2.16
$\frac{5}{16}$	2.99	2.83	2.55
$\frac{3}{8}$	3.43	3.24	2.93
$\frac{7}{16}$	3.85	3.63	3.29
$\frac{1}{2}$	4.25	4.02	3.63

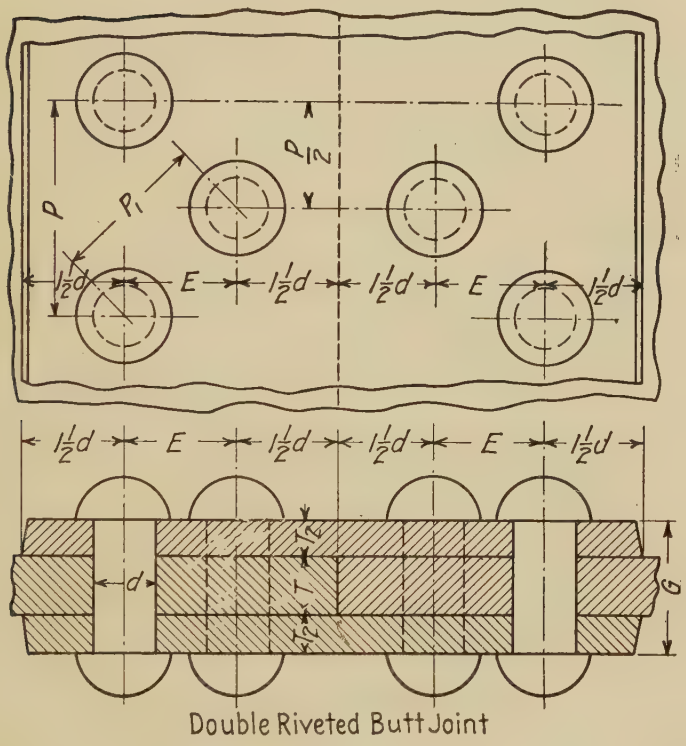

FIG. 23.

35. In riveted structures it becomes necessary to connect plates in other ways differing from those shown above. The plates may be at right angles or parallel or oblique to each other. In these cases rolled bars of steel are used of various forms, those most commonly used being shown in Fig. 24, and

called angles, Z bars, channels, and I beams. Columns, beams, and girders are formed by riveting these bars together with plates in different combinations. These are known as built sections, the simplest type being shown below, composed of a plate and two angles.

" Angles " are made with equal or unequal legs and of varying thicknesses. An angle is designated by giving the distance F

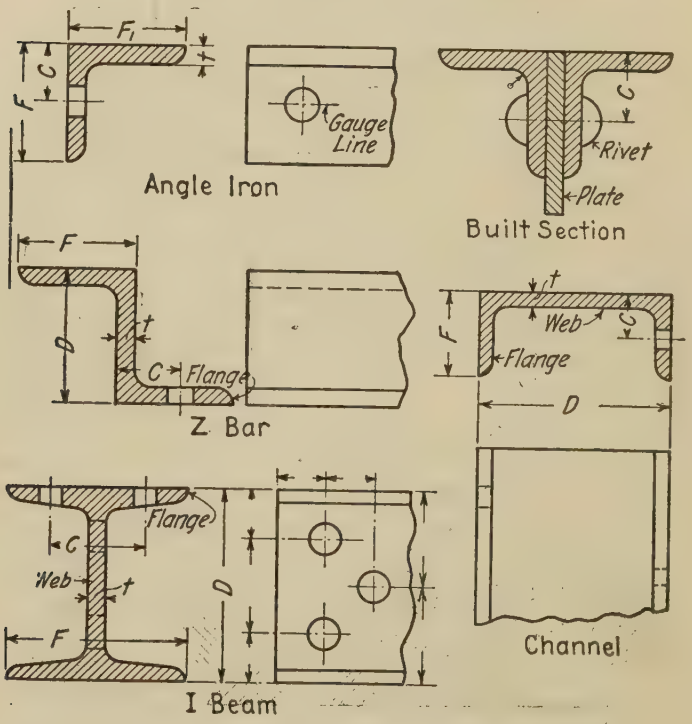

FIG. 24.—Rolled Structural Shapes.

and F_1 and the thickness t as $3'' \times 2\frac{1}{2}'' \times \frac{5}{16}''$. In Z bars the depth D is given, also F and t in the following order, $6'' \times 3'' \times \frac{3}{8}''$. I beams and channels require D to be given and the weight per lineal foot as 10″, 33 #, I beam. The other dimensions of these rolled bars are usually found in tables furnished by the mills which roll them.

An angle may used to connect two plates, placed at right angles,

by means of rivets passing through each leg of the angle and the adjacent plate.

The lines along which the rivets are placed on a rolled beam are called gauge lines.

The distance of the gauge line is given from the back of the angle, or channel or Z bar and is a standard for each length of leg or width of flange. On I beams the distance *between* the two gauge lines is given. Fig. 25 shows two plates connected by an angle iron which is riveted to both of them.

The pitch P is a variable quantity depending on the diameter of rivet and the length (F) of the angle leg. The *minimum* value of L is given below for various values of C.

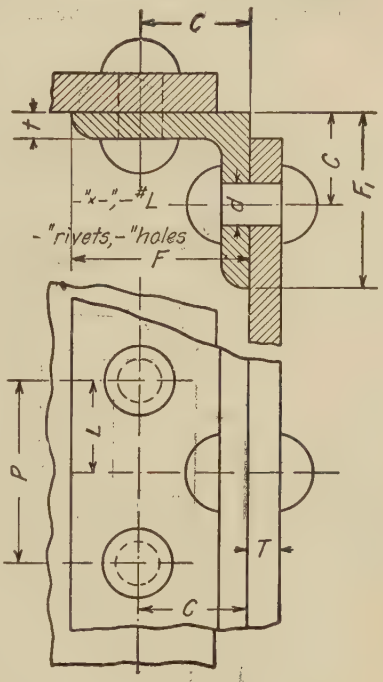

Fig. 25.

The minimum value of P is about three times the diameter of rivet.

	C.	$1\frac{1}{8}$	$1\frac{3}{16}$	$1\frac{1}{4}$	$1\frac{5}{16}$	$1\frac{3}{8}$	$1\frac{7}{16}$	$1\frac{1}{2}$	$1\frac{9}{16}$	$1\frac{5}{8}$	$1\frac{11}{16}$	$1\frac{3}{4}$
L	$\frac{3}{4}$″ rivet	$1\frac{1}{4}$	$1\frac{3}{16}$	$1\frac{1}{8}$	$1\frac{1}{16}$	$\frac{15}{16}$	$\frac{7}{8}$	$\frac{3}{4}$	$\frac{5}{8}$	$\frac{3}{8}$		0
	$\frac{7}{8}$″ rivet	$1\frac{3}{8}$	$1\frac{5}{16}$	$1\frac{1}{4}$	$1\frac{3}{16}$	$1\frac{1}{8}$	1	$\frac{15}{16}$	$\frac{13}{16}$	$\frac{11}{16}$	$\frac{1}{2}$	$\frac{5}{16}$

Fig. 26 shows an I beam fastened to two parallel plates. The rivets are staggered to avoid cutting the flange by two holes in the same vertical plane perpendicular to the web of the beam. A channel or Z bar is often used in place of an I beam for connecting two parallel plates.

The drawing exercise may be varied by making either substitution in Fig. 26.

Assume values of P in Figs. 25, 26. Dimensions of structural shapes will be found in Table 4. Page 12.

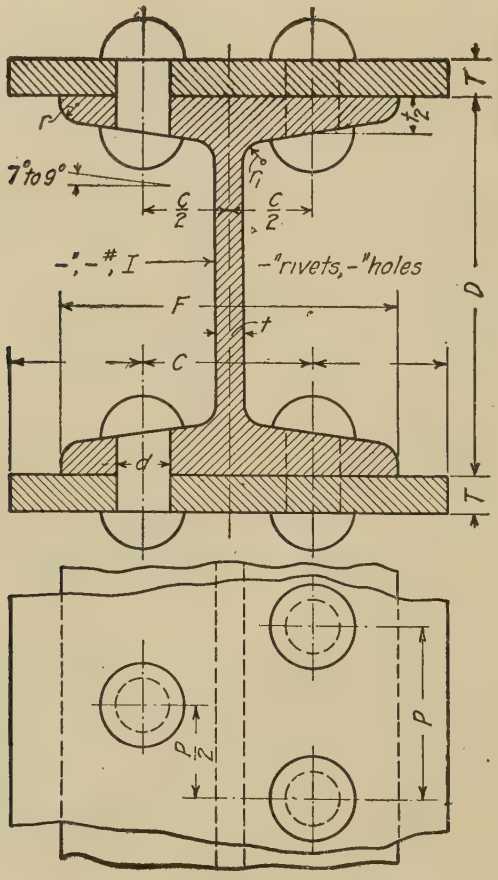

Fig. 26.—I-Beam.

INSTRUCTIONS

Plate 1, No. 2 paper, 2 hours allowed in class. Av. time necessary $3\frac{3}{4}$ hours.

Fig. 1. Two plates whose thickness is $T = (\quad)''$ are to be joined by means of a *double riveted lap joint*. The pressure they are to stand is $b = (\quad)$ lbs. Calculate the size of rivet to use the pitch of the rivets. and make two views (section and top view) of the joint, as in Fig. 22,

Use the first formula for P_1. Draw full size. Use a (*a*) head on one end of rivet and (*c*) head on the other.

Fig. 2. Make a section and top or side view of two plates T'' thick meeting at right angles and connected by a $F'' \times F'' \times t''$ angle iron as shown in Fig. 25. Button head rivets.

Fig. 3. Make two views (one a cross-section) of a (″) ( ). with a plate $\frac{3}{8}''$ thick riveted on each flange by button head rivets. Draw half size if maximum dimension of section exceeds 5″. Put all dimensions on the three figures above. Name of plate to be Riveted Joints and Rolled Sections. Bring to class fully dimensioned sketches of the above figures and draw from them. Text books not to be used in class. Reduce all decimals to nearest common fraction. (See Art. 10.)

TABLE OF ASSIGNMENTS FOR RIVETING

		1	2	3	4	5	6	7	8	9	10
Fig. 1	*T*	$\frac{1}{4}$	$\frac{5}{16}$	$\frac{3}{8}$	$\frac{7}{16}$	$\frac{1}{2}$	$\frac{1}{4}$	$\frac{5}{16}$	$\frac{3}{8}$	$\frac{7}{16}$	$\frac{1}{2}$
	b	120	120	120	120	120	150	150	150	150	150
	a	Pan	Pan	Pan	Cone	Cone	Cone	Cone	Cone	Csk.	Csk.
	c	Steep.	St.	But.	Cone	Csk.	But.	But.	St.	But.	St.
Fig. 2	*T*	$\frac{1}{2}$	$\frac{1}{2}$	$\frac{1}{2}$	$\frac{3}{8}$	$\frac{3}{8}$	$\frac{3}{8}$	$\frac{3}{8}$	$\frac{5}{16}$	$\frac{5}{16}$	$\frac{5}{16}$
	F	3	$2\frac{3}{4}$	$2\frac{1}{2}$	2	$2\frac{1}{4}$	3	3	3	$2\frac{1}{2}$	4
	t	$\frac{1}{4}$	$\frac{5}{16}$	$\frac{3}{16}$	$\frac{1}{4}$	$\frac{3}{16}$	$\frac{3}{8}$	$\frac{5}{16}$	$\frac{1}{4}$	$\frac{1}{4}$	$\frac{3}{8}$
Fig. 3	*D*	5	6	6	5	3	4	5	7	7	8
Kind		I	Chan.	I	Chan.	Z	Z	Z	I	Chan.	I

		11	12	13	14	15	16	17	18	19
Fig. 1	*T*	$\frac{1}{4}$	$\frac{5}{16}$	$\frac{3}{8}$	$\frac{7}{16}$	$\frac{1}{2}$	$\frac{7}{16}$	$\frac{1}{2}$	$\frac{1}{2}$	$\frac{7}{16}$
	b	225	225	225	225	225	225	225	150	225
	a	But.	Cone	Pan	But.	Cone	Csk.	Csk.	Csk.	Cone
	c	Cone	Pan	Cone	Csk.	But.	Cone	But.	Pan	St.
Fig. 2	*T*	$\frac{5}{16}$	$\frac{1}{4}$	$\frac{1}{4}$	$\frac{1}{4}$	$\frac{1}{4}$	$\frac{2}{16}$	$\frac{3}{16}$	$\frac{7}{16}$	$\frac{7}{16}$
	F	$3\frac{1}{2}$	3	2	$2\frac{1}{4}$	$2\frac{3}{4}$	$2\frac{1}{2}$	3	5	6
	t	$\frac{5}{16}$	$\frac{1}{4}$	$\frac{1}{4}$	$\frac{1}{4}$	$\frac{1}{4}$	$\frac{1}{4}$	$\frac{1}{4}$	$\frac{3}{8}$	$\frac{3}{8}$
Fig. 3	*D*	6	9	9	10	8	6	5	5	3
Kind		Z	I	Chan.	I	Chan.	Z	I	Chan.	Z

Give on the drawing the name of each joint or structural shape, dimensions of each kind of rivet head, size of each angle iron, Z bar, I beam or channel and its weight, as $3'' \times 3'' \times \frac{1}{4}''$ L 10# or 3″–I–10#.

CHAPTER III

PIPING AND PIPE FITTINGS

36. The pipes in common use to convey water, steam, gas, etc., are made of wrought iron and are known on the market by their nominal diameter. This nominal diameter is nearer the actual internal than the actual external, and in the larger sizes is the same as the actual internal. In small sizes the nominal inside diameter is much smaller than the actual inside, due to the fact that the early manufacturers of pipe made the small pipes too thick. Later, when they desired to change the thickness, it was considered better to increase the inside than to change the outside, for the latter would have necessitated changing all pipe fittings then on the market. The inside was increased, but the size of the original inside was still used as the name of the pipe.

Table 9 gives the *nominal* inside, *actual* inside, *actual* outside, thickness of metal, threads per inch, etc.

The *nominal* diameter of a pipe is always used in speaking of the pipe and is printed on a drawing where necessary to give the size of pipe. It should never be used as a dimension for the inside or outside of a pipe. The representation of a pipe on a drawing always necessitates the drawing of two parallel lines a distance apart equal to the actual outside diameter of the pipe. This outside diameter is found in Table 9, but the *dimension* found there is *never given on the drawing.* If it is necessary to show the inside of the pipe the thickness may also be taken from the table, but must not be given as a dimension on the drawing.

In all calculations involving the carrying capacity of pipes the *actual inside diameter* is always used, or the area of the circle whose diameter is the inside diameter of the pipe.

37. Since straight sections of pipe are only made from 16 to 20 feet long it is necessary to couple them together by short

tubes threaded on the inside and called *couplings*. The dimensions of these couplings will be found in Table 8. They screw on the pipe ends according to the distances given in Table 9, Column 9. If a coupling has right and left hand threads in it so that it will draw together the pipes which it couples, it is distinguished from a plain coupling by having ribs on the outside running lengthwise. See Fig. 27. These ribs are four in number up to and including 1″ pipe and six in number above that. They are $\frac{1}{4}$″ wide measured on the circumference and extend $\frac{1}{16}$″ above the outside of the coupling.

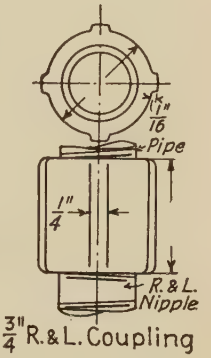

Fig. 27.

Pipes are also joined by screwing them into cast iron flanges and then bolting the flanges together. Valves are often placed in a pipe line by bolting to cast iron flanges which are screwed on the ends of the pipes. Pipes or valves so connected can be disconnected readily by taking out the bolts which pass through the flanges.

Fig. 28 shows a cast iron flange and below the table of dimensions adopted by the American Society of Mechanical Engineers, the Master Steam Fitters Association and the manufacturers of fittings. The diameter of bolts given are for pressures under 80 lbs. *Above 80 lbs. use bolt diameters* $\frac{1}{8}$″ *greater.* The width of flange between the bolt centers and hub may be taken equal to the width of flange outside the bolt centers, or just enough to allow the nut to clear the fillet by $\frac{1}{16}$″.

Fig. 28.

Table for Cast Iron Pipe Flanges
For use with Fig. 28

Pipe.	2	2½	3	3½	4	4½	5	6	7	8
L	6	7	7½	8½	9	9¼	10	11	12½	13½
M	4¾	5½	6	7	7½	7¾	8½	9½	10¾	11¾
S	5/8	11/16	3/4	13/16	15/16	15/16	15/16	10	1 1/16	1⅛
N	½	½	½	½	½	5/8	5/8	5/8	5/8	5/8
No. bolts	4	4	4	4	4	8	8	8	8	8
F	1	1⅛	1¼	1¼	1⅜	1⅜	1½	1½	1½	1¾

When pipes or cylinders are made of cast iron the flanges are cast on the cylinders themselves. The diameter, thickness, bolt circle diameter, number and diameter of bolts, etc., are given in Table 11,

38. The thread used on pipe and in pipe fittings is shown and described in the chapter on screw threads.

Short pieces of pipe threaded on both ends are called *nipples*. If one of the threaded ends is cut with a left hand thread the nipple is called an R and L nipple. See Fig. 27.

When a nipple is so short that the threaded portions meet at the middle, it is called a *close nipple*. If there is a short unthreaded portion in the middle the nipple is a *short* nipple. Lengths of nipples will be found in Table 8. The amount of thread on a nipple which enters a fitting will be found in column 9, Table 9.

39. By pipe fittings we mean such fittings as are necessary to make connections between two or more pipes of the same size or of different sizes which may meet end to end or at various angles. They are made of wrought iron, malleable iron, cast iron, or brass.

Couplings only are made of wrought iron. Malleable and cast iron fittings are used on steam, gas and water pipe for medium and heavy pressures, up to 250 lbs. pressure. Among the fittings in use may be mentioned caps, plugs, locknuts, bushings, reducers, elbows, crosses, tees, Y-branches, unions, bends.

If two pipes of different size enter a fitting the dimensions of the fitting are usually determined from the larger pipe.

A **cap** is a fitting used to close the end of a pipe which has had a connection removed. It is drawn from the outside dimensions given in Table 8. It is usually of wrought iron or malleable iron.

A **plug** is used to close an opening in a fitting from which a pipe has been removed or into which a pipe will be screwed at some future time. It has a square head and a threaded body whose outside diameter equals the outside diameter of a wrought iron pipe of the same nominal size. It is tapered like a pipe end. The dimensions of the square head and length of that portion beyond the head (all of which is threaded) will be found in Table 8. A plug is shown in Fig. 31 as it appears when screwed into a fitting.

A **locknut** is used to make a tight joint between a pipe and a fitting whenever it has been necessary to cut perfect threads on the pipe ends for more than the standard distance. These threads are cut in order to let it enter the fitting far enough to permit the other end of the pipe to be introduced into a fixed fitting. The locknut simply presses against the face of the fitting and draws the threads on the pipe against those in the fitting, which prevents the liquid or gas within from escaping between the threaded surfaces. The dimensions of locknuts for pipes are given in Table 8. Locknuts are hexagonal in shape and the distance *across flats* is the distance between the parallel sides of the hexagon. A groove is made in one of the sides of the locknut and filled with wicking so that when this side is pressed against the face of the fitting, all leaking at the joint will be stopped. A locknut in position is shown in Fig. 31.

A **bushing** is used when a pipe of any size must be screwed into a fitting which fits a larger size pipe. The threaded outside of the bushing fits the threaded hole in the fitting. The hole if the bushing corresponds to the size on pipe which is to be screwed into it. The bushing has a hexagonal head whose distance across flats and thickness will be found in Table 8. The size of a bushing depends on the diameter of two pipes but the principal dimensions depend on the size of the larger pipe. A 1″ by $\frac{1}{2}$″ bushing for instance will be proportioned in *external* dimensions from the 1″ size but the hole in it will take a $\frac{1}{2}$″ pipe. Fig. 29 shows a bushing. The dimensions A, B, and C can be taken from Table 8 for the x dimension.

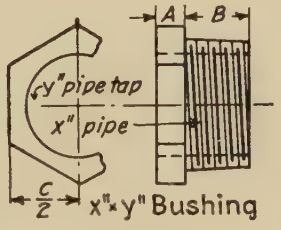

FIG. 29.

40. Cast Iron Fittings are used on steam and water pipe connections to enable them to be removed in case of rusting on, by breaking them with a heavy hammer. They can be replaced by new ones at small expense.

The standard pattern is used for pressures up to 150 lbs. per square inch, the extra heavy from 150 to 250 lbs. The most common of these fittings are the *elbows* (90° and 45°), called *ells, tees, crosses, Y branches* or *bends.*

As it is often necessary for a draughtsman to represent pipe

lines with their fittings and yet not dimension them, nor indeed know their dimensions, the following scale was devised by Prof. Charles B. Richards and the writer. See Fig. 30.

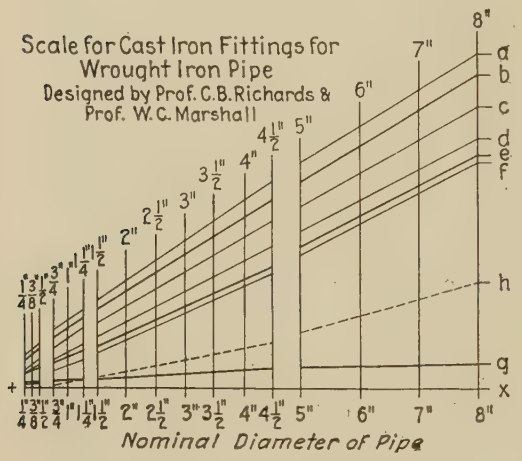
Scale for Cast Iron Fittings for Wrought Iron Pipe
Designed by Prof. C.B. Richards & Prof. W.C. Marshall
Nominal Diameter of Pipe

Standard Pattern	Extra Heavy Pattern
$\frac{A}{2} = bx$	$\frac{A}{2} = ax$
$B = be$	$B = be$
$C = be$	$C = ae$
$\frac{D}{2} = bg$	$\frac{D}{2} = ag$
$E = gx$	$E = gx$
$F = bf$	$F = af$
$G = hb$	$G = ha$
$\frac{d}{2} = cg$	$\frac{d}{2} = cg$
$t = bc$	$t = ac$

$\frac{\text{Outside diam. of pipe}}{2} = dx$

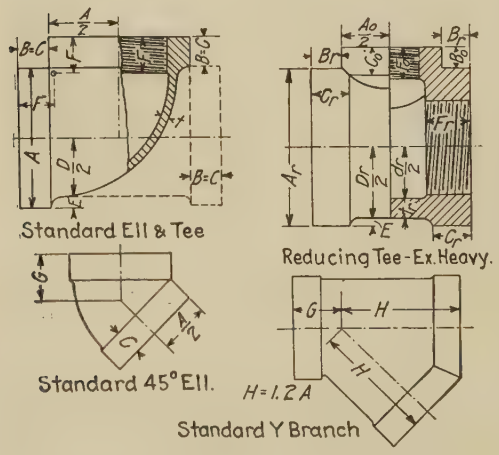

FIG. 30.

The commercial dimensions of fittings of the Walworth Mfg. Co., which are shown below the scale, were used as a basis. The scale can be laid out full size from the table on the next page, the dimensions given being laid off above the x line on the pipe diameter ordinate indicated at the top of each column. After constructing and lettering the scale, the table or "key" at the right is then put in as well as the printing below it, which enables the outside diameter of any pipe to be found from the scale directly without a table. The fittings shown at the bottom of Fig. 30 can then be drawn from the scale and key. As the b, e, g lines are used

most often for *standard* fittings they are made blacker than the others to attract attention.

TABLE FOR LAYING OUT SCALE

	$\frac{1}{4}''$	$\frac{1}{2}''$	$\frac{3}{4}''$	$1\frac{1}{4}''$	$1\frac{1}{2}''$	$4\frac{1}{2}''$	$5''$	$8''$	Pipe.
ax	$\frac{19}{32}$	$\frac{13}{16}$	1.0	$1\frac{3}{8}$	$1\frac{17}{32}$	$3\frac{5}{8}$	$3\frac{15}{16}$	$5\frac{13}{16}$	ins.
bx	$\frac{1}{2}$	$\frac{23}{32}$	$\frac{7}{8}$	$1\frac{1}{4}$	$1\frac{3}{8}$	$3\frac{9}{32}$	$3\frac{5}{8}$	$5\frac{7}{16}$	"
cx	$\frac{3}{8}$	$\frac{9}{16}$	$\frac{11}{16}$	$1\frac{1}{16}$	$1\frac{3}{32}$	$2\frac{15}{16}$	$3\frac{3}{16}$	$4\frac{7}{8}$	"
dx	$\frac{9}{32}$	....	....	....	....	.....	.....	$4\frac{5}{16}$	"
ex	$\frac{9}{32}$	$\frac{3}{8}$	$\frac{7}{16}$	$\frac{11}{16}$	$\frac{3}{4}$	$2\frac{5}{32}$	$2\frac{15}{32}$	$4\frac{1}{16}$	"
fx	$\frac{5}{32}$	$\frac{1}{4}$	$\frac{5}{16}$	$\frac{9}{16}$	$\frac{5}{8}$	$2\frac{1}{32}$	$2\frac{11}{32}$	$3\frac{15}{16}$	"
gx	$\frac{3}{32}$	$\frac{1}{8}$	$\frac{1}{8}$	$\frac{5}{32}$	$\frac{5}{32}$	$\frac{3}{8}$	$\frac{3}{8}$	$\frac{7}{16}$	"
hx	$\frac{1}{16}$	$\frac{3}{32}$	$\frac{1}{16}$	$\frac{3}{16}$	$\frac{3}{16}$	$\frac{13}{16}$	1.0	$1\frac{27}{32}$	"

A fitting is generally known by the pipe which fits it but it is often necessary to consider more than one size of pipe. An *ell* may have one size opening in one side and another size in the other, in which case *two* ordinates must be used for A, B, C, D, and E. A *tee* may have all openings of one size or only two alike or all different. In describing tees, the "run" is named first then the "outlet." If there are two sizes on the "run" the larger is given first, as in the one shown here $1'' \times \frac{1}{2}'' \times \frac{3}{4}''$ which would be called a $1'' \times \frac{3}{4}'' \times \frac{1}{2}''$ tee. If the two opposite openings are alike and larger than the outlet the tee is called a reducing tee, the run being given first. If the outlet is larger than the run the tee is called a "bull head" tee.

In the reducing tee shown in Fig. 30 the letters with the subscript r are laid off from one ordinate of the scale and those with the subscript o from another ordinate. The tapped holes in the fittings have the same diameter as the *outside* of the pipes which fit them.

The 45° ell and the Y branch use the same letters for dimensions not shown as those given for the tees and 90° ell.

A **cross** has four openings whose center lines are 90° apart and the pipes which fit them may be of one, two or three sizes. The outlets are always alike while the "runs" may be alike or different. Fig. 31 shows a cross with all openings the same and called a $\frac{3}{4}''$ cross. If the openings are as indicated here the outlets alike and runs different, it will be called a $1\frac{1}{2}'' \times 1'' \times \frac{3}{4}''$

cross. The lettered dimensions in Fig. 30 may be used for the cross dimensions. The cross in Fig. 31 has a pipe and locknut at one outlet and a plug at the other. Both runs are open.

41. A **union** is used for connecting the sections of a pipe line when the line has to be taken down occasionally or to make the line easier to assemble as well as to dispense with locknuts. It is made of malleable iron or brass.

A union is composed of three pieces. Two of these, (*D*) and (*C*), are screwed firmly on the ends of the pipes to be connected and the third piece called the "nut" draws them tightly together by means of the threads on (*D*) and the flange

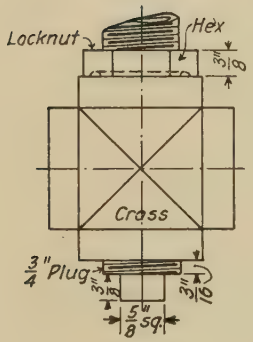

Fig. 31.

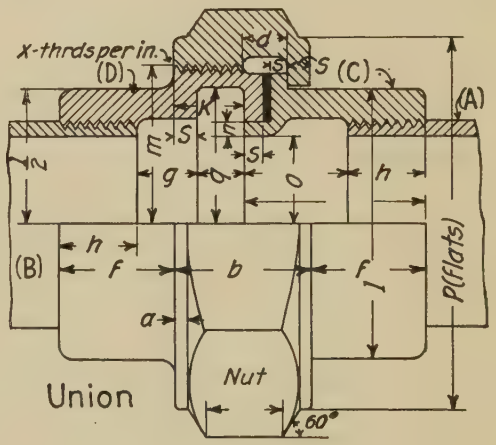

Fig. 32.

on (*C*). Fig. 32 shows a union holding together two pipes (*A*) and (*B*). The view shows a half section above the center line.

The black substance between (*C*) and (*D*) is a rubber gasket which keeps the joint from leaking. Sometimes this is omitted and the joint ground to a spherical form. The dimensions of four sizes of unions will be found in the table following.

It is recommended to omit the pipes from the drawing which can be either assembled or detailed.

Flange Unions are used to join pipes by screwing them on the pipe ends and bolting together. The Table for dimensions of such unions is given on page 61, and the drawing of the union on page 62. (See Fig. 33.)

Table for Dimensions of Unions

Nom. Pipe Size, ins.	*a*	*b*	*d*	*f*	*h*	*k*	*l*	*m*	*n*	*o*	*p*	2*q*	*s*	*x*
$\frac{3}{4}$	$\frac{1}{8}$	$\frac{7}{8}$	$\frac{5}{16}$	$\frac{3}{4}$	$\frac{1}{2}$	$\frac{7}{16}$	$1\frac{3}{8}$	$\frac{7}{8}$	$\frac{5}{64}$	$\frac{13}{32}$	2	$1\frac{7}{16}$	$\frac{1}{8}$	14
1	$\frac{1}{8}$	1	$\frac{3}{8}$	$\frac{13}{16}$	$\frac{9}{16}$	$\frac{1}{2}$	$1\frac{3}{4}$	$1\frac{1}{16}$	$\frac{3}{32}$	$\frac{1}{2}$	$2\frac{1}{2}$	$1\frac{3}{4}$	$\frac{5}{32}$	11
$1\frac{1}{4}$	$\frac{3}{16}$	$1\frac{1}{16}$	$\frac{13}{32}$	$\frac{29}{32}$	$\frac{19}{32}$	$\frac{17}{32}$	$2\frac{1}{8}$	$1\frac{1}{4}$	$\frac{7}{64}$	$\frac{11}{16}$	$2\frac{7}{8}$	$2\frac{1}{8}$	$\frac{5}{32}$	11
$1\frac{1}{2}$	$\frac{3}{16}$	$1\frac{1}{8}$	$\frac{13}{32}$	1.0	$\frac{23}{32}$	$\frac{9}{16}$	$2\frac{13}{32}$	$1\frac{13}{32}$	$\frac{1}{8}$	$\frac{13}{16}$	$3\frac{7}{32}$	$2\frac{13}{32}$	$\frac{3}{16}$	11

Flange Unions. Table 5

Pipe size . . .		$\frac{1}{2}$	$\frac{3}{4}$	1	$1\frac{1}{4}$	$1\frac{1}{2}$	2	$2\frac{1}{2}$	3	$3\frac{1}{2}$	4	$4\frac{1}{2}$	5	6	7	8	9	10	12
Diameter of flange. . . .	*D*	3	$3\frac{1}{4}$	$3\frac{5}{8}$	$4\frac{1}{4}$	$4\frac{5}{8}$	$5\frac{1}{4}$	$5\frac{3}{4}$	$6\frac{3}{4}$	$7\frac{1}{4}$	8	$8\frac{3}{4}$	$9\frac{1}{2}$	$10\frac{3}{4}$	$12\frac{1}{2}$	14	15	17	19
Thickness of flange. . . .	*T*	$\frac{3}{8}$	$\frac{7}{16}$	$\frac{1}{2}$	$\frac{1}{2}$	$\frac{1}{2}$	$\frac{9}{16}$	$\frac{9}{16}$	$\frac{5}{8}$	$\frac{3}{4}$	$\frac{3}{4}$	$\frac{7}{8}$	$\frac{7}{8}$	$\frac{7}{8}$	$\frac{15}{16}$	1	1	$1\frac{1}{16}$	$1\frac{1}{4}$
Length of thread . . .	*L*	$\frac{5}{8}$	$\frac{7}{8}$	$\frac{15}{16}$	1	1	$1\frac{1}{8}$	$1\frac{3}{16}$	$1\frac{1}{4}$	$1\frac{3}{8}$	$1\frac{1}{2}$	$1\frac{3}{4}$	$1\frac{3}{4}$	$1\frac{3}{4}$	$1\frac{7}{8}$	$1\frac{7}{8}$	$1\frac{7}{8}$	2	2
Diameter bolt circle.	*B*	$2\frac{1}{16}$	$2\frac{3}{16}$	$2\frac{11}{16}$	$3\frac{1}{8}$	$3\frac{1}{2}$	4	$4\frac{1}{2}$	$5\frac{3}{8}$	6	$6\frac{11}{16}$	$7\frac{1}{2}$	8	$9\frac{1}{2}$	$10\frac{1}{2}$	12	$12\frac{1}{4}$	$14\frac{3}{8}$	$16\frac{7}{8}$
Number of bolts.		4	4	4	4	4	4	4	4	4	5	5	5	6	6	8	8	10	12
Size of bolts	*d*	$\frac{3}{8}$	$\frac{1}{2}$	$\frac{1}{2}$	$\frac{1}{2}$	$\frac{1}{2}$	$\frac{1}{2}$	$\frac{5}{8}$	$\frac{5}{8}$	$\frac{5}{8}$	$\frac{5}{8}$	$\frac{5}{8}$	$\frac{5}{8}$	$\frac{5}{8}$	$\frac{5}{8}$	$\frac{3}{4}$	$\frac{3}{4}$	$\frac{3}{4}$	$\frac{3}{4}$

42. Pipes are used for conveying water, steam, gas, or air.

The volume delivered depends on the pressure, the size of the pipe, the length of pipe as well as the number of elbows, tees, and valves in the line. The frictional resistance of the pipe and fittings amounts to a reduction in pressure at the outlet of the pipe which may reduce the flow greatly.

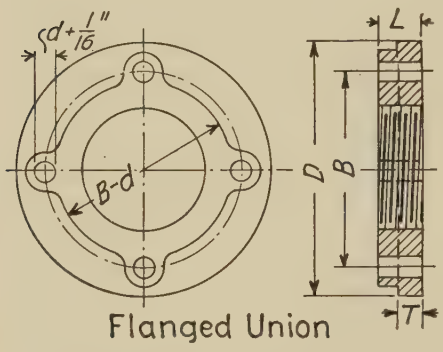

FIG. 33.

The velocity of flow may be calculated approximately for water pipe discharge by the following formulæ.

$$v = m\sqrt{\frac{hd}{L+54d}}$$

v = mean velocity in feet per second;
m = coefficient from table below;
d = diameter of inside of pipe in feet;
h = total head in feet;
L = total length of line in feet.

If the pressure is given in pounds per square inch instead of the head in feet, divide d by 0.434, which is the pressure per square inch exerted by a column of water one foot high, and the value obtained will be h required.

VALUES OF COEFFICIENT m

$\sqrt{\frac{hd}{L+54d}}$	Diam. of Pipe in Feet.							
	.05	.01	.05	1	1.5	2	3	4
.005	29	31	33	35	37	40	44	47
.01	34	35	37	39	42	45	49	53
.02	39	40	42	45	49	52	56	59
.03	41	43	47	50	54	57	60	63
.05	44	47	52	54	56	60	64	67
.10	47	50	54	56	58	62	66	70
.20	48	51	55	58	60	64	67	70

The friction of water in long pipes requires an increase in pressure at the entrance of the pipe to give the same discharge at the outlet which would be obtained in a short pipe with the given pressure.

The increased pressure required to overcome this friction is given in Table 6. The friction loss in elbows is given in Table 7.

Table 6

Friction of Water in Pipes

Pressure in Pounds per Square Inch to be added for each 100 feet of Clean Iron Pipe

Gallons per Minute Delivered.	Nominal Pipe Sizes.											
	¾	1	1¼	1½	2	2½	3	3½	4	5	6	7
5	3.3	.84	.31	.12	.04	.02						
10	13.0	3.16	1.05	.47	.12	.04	.02					
15	28.7	6.98	2.38	.97	.25	.08	.04	.02				
20	50.4	12.3	4.07	1.66	.42	.14	.06	.03				
25	78.0	19.0	6.40	2.62	.62	.21	.10	.04	.02			
30	..	27.5	9.15	3.75	.91	.30	.13	.06	.03			
35	..	37.0	12.4	5.05	1.22	.40	.17	.09	.05	.02		
40	..	48.0	16.1	6.52	1.60	.53	.23	.11	.06	.02		
45	..	...	20.2	8.15	1.99	.66	.28	.14	.07	.03		
50	..	...	24.9	10.0	2.44	.81	.35	.17	.09	.04		
60	..	...	36.0	14.0	3.50	1.17	.50	.24	.13	.05	.02	
70	..	...	48.0	20.0	4.80	1.50	.60	.38	.19	.07	.03	
75	..	...	56.1	22.4	5.32	1.80	.74					
80	..	...	64.0	25.0	6.30	2.00	.90	.41	.23	.08	.03	
90	..	...	80.0	32.0	7.80	2.58	1.10	.54	.26	.09	.04	
100	..	...	...	39.0	9.46	3.20	1.31	.64	.33	.12	.05	.02
125	..	...	...	...	14.9	4.89	1.99	.96	.49	.17	.07	.03
150	..	...	...	...	21.2	7.00	2.85	1.35	.69	.25	.10	.04
175	..	...	...	...	28.1	9.46	3.85	1.82	.93	.34	.13	.05
200	..	...	...	...	37.5	12.47	5.02	2.38	1.22	.42	.17	.07
250	..	...	...	...	...	19.66	7.76	3.70	1.89	.65	.26	.12
300	..	...	...	...	...	28.06	11.2	5.04	2.66	.93	.37	.17
350	..	...	...	...	...	...	15.2	7.10	3.65	1.26	.50	.23
400	..	...	...	...	...	...	19.5	9.25	4.73	1.61	.65	.30
450	..	...	...	...	...	...	25.0	11.70	6.01	2.00	.81	.37
500	..	...	...	...	...	...	30.8	14.5	7.43	2.40	.96	.45
750	..	...	...	...	...	...	...	...	..	..	2.21	1.03
1000	..	...	...	...	...	...	...	...	..	..	3.88	1.80
1250	..	...	...	...	...	...	...	...	..	..	6.00	2.85
1500	..	...	...	...	...	...	...	...	..	..	8.60	4.08

Table is based on Ellis and Howland's experiments. To find "Friction Head" in feet multiply figures by 2.3.

TABLE 7

FRICTION OF WATER IN ELBOWS

Pressure in Pounds per Square Inch to be added for each Elbow

Gallons per Minute Delivered.	Nominal Pipe Sizes,										
	¾	1	1¼	1½	2	2½	3	3½	4	5	6
5	.07	.027	.008	.005	.002						
10	.28	.094	.031	.018	.006	.003					
15	.63	.212	.069	.04	.014	.005					
20	1.12	.376	.123	.069	.025	.012	.005				
25	1.74	.585	.194	.108	.038	.02	.008				
30	...	.845	.278	.157	.055	.028	.011				
35	...	1.15	.380	.215	.076	.037	.015	.009			
40	...	1.50	.495	.278	.098	.049	.02	.011	.007		
45	...	1.90	.626	.352	.125	.062	.026	.015	.009		
50	...	...	.77	.43	.153	.08	.032	.017	.01		
60	...	3.38	1.11	.62	.22	.112	.044	.026	.015	.006	.003
70	...	4.60	1.52	.86	.304	.148	.06	.035	.021	.009	.004
75	...	5.30	1.74	.98	.35	.172	.072	.04	.024	.01	.005
80	...	6.00	1.98	1.11	.392	.196	.08	.044	.027	.012	.005
90	...	7.60	2.50	1.41	.50	.248	.104	.06	.035	.014	.007
100	...	...	3.08	1.72	.612	.32	.128	.068	.043	.017	.008
125	...	...	...	2.72	.97	.48	.20	.112	.067	.027	.013
150	...	...	...	3.92	1.39	.685	.286	.16	.096	.039	.019
175	...	...	...	5.32	1.90	.935	.390	.218	.132	.053	.026
200	...	...	...	6.88	2.44	1.28	.512	.272	.172	.068	.032
250	...	...	...	...	3.86	1.91	.80	.446	.268	.109	.052
300	...	...	...	...	5.56	2.74	1.14	.64	.384	.156	.076
350	...	...	...	...	...	3.77	1.58	.88	.530	.215	.103
400	...	...	...	...	...	5.12	2.05	1.09	.688	.272	.128
450	...	...	...	...	...	6.20	2.58	1.45	.870	.352	.170
500	...	...	...	...	...	7.64	3.20	1.78	1.07	.436	.208
750	...	...	...	...	...	...	...	...	2.42	.970	.470
1000	...	...	...	...	...	...	...	...	4.28	1.74	.832
1250	...	...	...	...	...	...	...	...	6.70	2.71	1.31
1500	...	...	...	...	...	...	...	...	9.68	3.88	1.88

Table is based on Weisbach's formula for very short bends, or with a radius equal to the radius of the pipe. To find "Friction Head" in feet multiply figures by 2.3.

43. The flow of steam in pipes can be computed from the following formula:

$$Q = 56.68\sqrt{\frac{(P_1 - P_2 d^5)}{Lw}},$$

where the symbols are as given below:

Q = quantity in cubic feet per minute;
d = pipe diameter in inches;
L = length of pipe in feet;
P_1 = pressure of steam per square inch at entrance of pipe;
P_2 = pressure of steam per square inch at exit of pipe;
w = weight per cubic foot of steam at pressure P_1.

$$d = 0.199\sqrt[5]{\frac{Q^2 w L}{P_1 - P_2}}.$$

The resistance of a globe valve is about the same as that in an additional length of pipe in feet $= \frac{144 \times \text{diam. of pipe}}{1 + (3.6 \div \text{diameter})}$.

The resistance of a right angled elbow or a tee is $\frac{2}{3}$ that of a globe valve. The resistance to entrance of a pipe is the same as for a globe valve.

44. Oil cups are usually made with pipe threads of standard dimensions to fit pipe tapped holes, but the inside diameters of these threaded ends do not agree with the inside dimensions of pipes having the same outside diameter. The inside is smaller than that of the pipe and nearly agrees with the nominal inside of the pipe. That is, a $\frac{1}{4}''$ pipe thread on an oil cup will have the actual outside diameter of a quarter inch pipe but the inside will be $\frac{1}{4}''$ diameter instead of .364″.

Oil cup dimensions will be found in Table 10, page 16.

INSTRUCTIONS

Plate 1. No. 1 paper, 2 hours allowed. Average total hours required, 2.9.

Draw two views full size of each of the following pipe fittings. An $(h)''$ locknut, an $(f)''$ R and L coupling, an $(i)'' \times (j)''$ bushing, a cast iron pipe flange for an $(m)''$ pipe to carry 100 lbs. pressure, a $(g)''$ cap, an $(e)''$ plug, and a 1″ R and L short nipple. Put on all the allowable dimensions and name the plate *Pipe Fittings.*

Plate 2. Construct outside the class the scale for pipe fittings from the table in Art. 40. Use a sheet of drawing paper size No. 2, placing it on the board with the 11″ side parallel to the T square blade. Draw the scale for fittings at the top of it with the "key" above and to the

left of the scale. Omit the table used in laying out the scale. Below the scale draw in class the following fittings, putting the letters on the drawings as they are given in Fig. 30. A standard Ell and Tee (combined in one drawing) for an (*a''*) pipe. A (*b''*) reducing Tee (extra heavy). A (*c''*) standard 45° Ell and a (*d''*) Y branch. Name under each fitting.

The scale is to be drawn *outside* of class and the fittings *in* class during one period of two hours. Average total hours required, 2.8. Name the plate "Scale for C. I. Pipe Fittings."

Plate 3. No. 1 paper, 2 hours allowed. Average total hours required 3.5.

Draw in detail each part of a (*T'''*) Union. Two views of each will be required, one half of the side view in section. Give *all* the dimensions of each part and name the plate, "Details of a —" Union." Make a bill of material on the drawing.

TABLE OF SIZES FOR PIPE FITTING PLATES

		1	2	3	4	5	6	7	8	9	10	11	12
Plate 1	*e*	$\frac{1}{2}$	1	$\frac{3}{4}$	2	$1\frac{1}{4}$	$1\frac{1}{2}$	$\frac{1}{2}$	1	2	$1\frac{1}{2}$	$1\frac{1}{4}$	$2\frac{1}{2}$
	f	1	$\frac{3}{4}$	$\frac{1}{2}$	$1\frac{1}{4}$	1	$1\frac{1}{4}$	$\frac{3}{4}$	$\frac{1}{2}$	$\frac{3}{8}$	1	$\frac{3}{4}$	1
	g	$\frac{1}{2}$	$\frac{3}{8}$	$\frac{3}{4}$	1	$\frac{1}{2}$	1	$1\frac{1}{2}$	$\frac{3}{4}$	$1\frac{1}{4}$	$1\frac{1}{2}$	1	$\frac{3}{4}$
	h	$1\frac{1}{2}$	$1\frac{1}{4}$	1	$\frac{3}{4}$	$1\frac{1}{4}$	$\frac{3}{4}$	1	1	$\frac{1}{2}$	$\frac{3}{4}$	$1\frac{1}{2}$	$\frac{1}{2}$
	i	$\frac{3}{4}$	1	$1\frac{1}{4}$	$1\frac{1}{2}$	1	$1\frac{1}{4}$	$\frac{3}{4}$	$1\frac{1}{2}$	1	$\frac{1}{2}$	$1\frac{1}{4}$	1
	j	$\frac{1}{2}$	$\frac{1}{2}$	$\frac{3}{4}$	$\frac{3}{4}$	$\frac{1}{2}$	$\frac{3}{4}$	$\frac{1}{2}$	1	$\frac{3}{4}$	$\frac{3}{8}$	$\frac{3}{8}$	$\frac{1}{2}$
	m	$2\frac{1}{2}$	3	$3\frac{1}{2}$	4	$4\frac{1}{2}$	5	6	7	3	$3\frac{1}{2}$	4	$4\frac{1}{2}$
Plate 2	*a*	1	$1\frac{1}{4}$	$1\frac{1}{2}$	$\frac{3}{4}$	1	$1\frac{1}{4}$	$1\frac{1}{2}$	1	$\frac{3}{4}$	1	$1\frac{1}{4}$	$1\frac{1}{2}$
	b	$1\frac{1}{4}\times\frac{1}{2}$	$1\times\frac{1}{2}$	$\frac{3}{4}\times\frac{1}{2}$	$1\frac{1}{2}\times\frac{3}{4}$	$1\frac{1}{4}\times\frac{3}{4}$	$1\times\frac{3}{8}$	$\frac{3}{4}\times\frac{1}{2}$	$1\times\frac{3}{4}$	$1\frac{1}{4}\times\frac{3}{4}$	$1\frac{1}{2}\times1$	$1\frac{1}{4}\times\frac{1}{2}$	$1\times\frac{1}{2}$
	c	$\frac{1}{2}$	$\frac{3}{8}$	$\frac{3}{4}$	1	$1\frac{1}{4}$	$1\frac{1}{2}$	$\frac{3}{4}$	1	$\frac{1}{2}$	$\frac{3}{4}$	1	$1\frac{1}{4}$
	d	$1\frac{1}{4}$	$1\frac{1}{2}$	1	$\frac{3}{4}$	$\frac{1}{2}$	$\frac{3}{8}$	1	$1\frac{1}{4}$	$1\frac{1}{2}$	$1\frac{1}{4}$	$1\frac{1}{4}$	1
Pl. 3	*T*	$\frac{3}{4}$	$1\frac{1}{4}$	1	$1\frac{1}{2}$	$\frac{3}{4}$	1	$1\frac{1}{4}$	$1\frac{1}{2}$	1	$1\frac{1}{4}$	$1\frac{1}{2}$	1

Prob. 1. Calculate the velocity of flow of water at the outlet of a line of 2" pipe 200 feet long, which has a head of 150 ft., at the entrance. There are 4 elbows in the pipe line. Also calculate the volume in gallons delivered at the outlet.

Prob. 2. An engine uses 1000 cu.ft. of steam per hour. The length of pipe between boiler and engine is 100 feet with two elbows and two globe valves. The boiler pressure is 100 lbs. and pressure in engine cylinder 90 lbs. $w=0.225$. What diam. of pipe will be necessary and at what velocity will the steam enter the steam chest of the engine?

CHAPTER IV

SCREW THREADS AND HELICAL SPRINGS

45. Screw threads are composed of helicoidal surfaces formed by a tool, which cuts into a rotating cylinder and is made to move in a line parallel to the axis of the cylinder while cutting. Each point on the tool traces a helix whose construction is shown in Fig. 34.

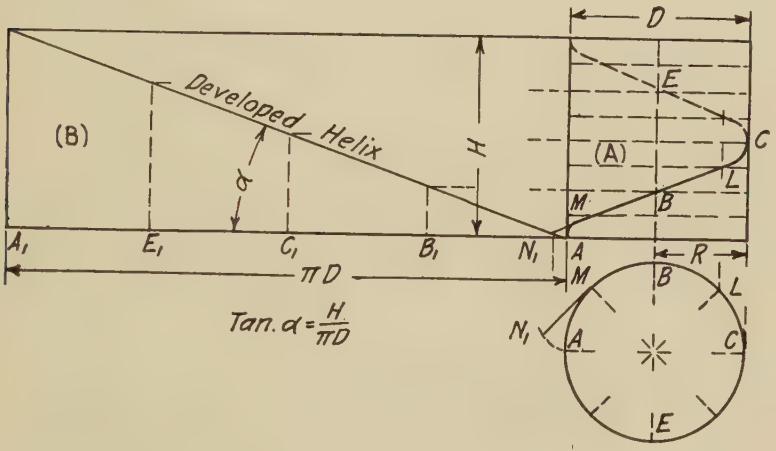

Fig. 34.

If the surface of the cylinder is laid out flat, the helix appears on this development as a straight line. The angle α is the angle which the helix makes with a plane perpendicular to the axis of the cylinder. The distance H is the pitch of the helix and D is the diameter of the cylinder. The shape of thread produced depends on the form of tool used. The forms of tools are such as to produce threads known by the following trade names, viz.: Vee, Sellers or U. S. Standard, Modified Square or Acme, Buttress, Whitworth, Pipe, Square, International or Metric, etc.

These threads may be divided into two classes, viz.: those used for *fastenings* and those used for *transmitting power*.

Under the first head are grouped the V thread, U. S. Standard, Whitworth, International, pipe, and others whose form is of a V shape. Under the second, or power transmission head, are found the square, buttress, modified square or Acme.

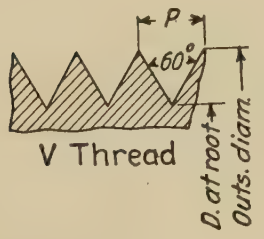

Fig. 35.

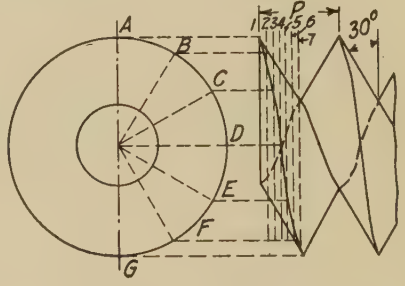

Fig. 36.—Helices on V Thread.

46. In order to correctly represent a thread, we must know its pitch, the shape of the tooth or thread, as well as the outside diameter of the cylinder on which it is formed. The helices must be constructed as shown in Fig. 34. A V thread has a profile as shown in Fig. 35. The construction of a V thread

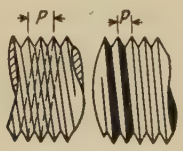

Fig. 37.

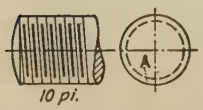

Fig. 38.—Conventional Thread.

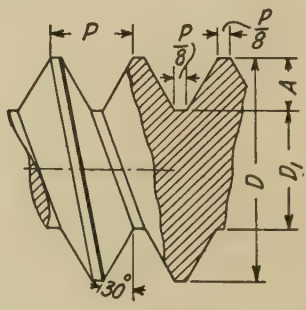

Fig. 39.—U. S. St. Thread.

is shown in Fig. 36, and the completed representation in Fig. 51 (*A*). In order to lessen the labor of drawing the helices they can usually be represented by straight lines as in Fig. 37. A further simplification omits the V profile of the thread and

shows merely the lines joining the roots and the lines joining the points or crests. The root lines are quite heavy and the crest lines light as shown in Fig. 38, which is the *conventional representation* of *V* and *U. S. St. screw threads.* The pitch of a V thread is $=P=\frac{1}{N}$, where $N=$No. of threads per inch. The depth of thread$=P\times.866$. Diam. at root$=D-1.73P$. The V thread has the disadvantage of being easily damaged, which led to the adoption of the U. S. Standard thread, which has the tops and bottoms of the threads flattened to $\frac{1}{8}$ the pitch. This thread profile is shown in Fig. 39 together with the outside view of a threaded cylinder, the helices being replaced by straight lines. The conventional representation is shown in Fig. 38 the same as a V thread. When the helices are actually constructed the thread appears as shown in Fig. 51 (*B*), but this is rarely done. The pitch (*P*) of these threads is determined from the formula

$$P=0.24\sqrt{D+0.625}-0.175=\frac{1}{N}.$$

The depth of thread$=A=0.65P=\frac{0.65}{N}$. $N=$the number of threads per inch and will be found in column 16, Table 1. The diameter at root$=D-2A=D-\frac{1.30}{N}$ which is given in column *B*, Table 1. The diam. at root and depth of thread are used on bolt calculations involving tensile strength and not in drawing the profile of thread. For drawing purposes *P*, *D*, and $\frac{P}{8}$ are the only dimensions needed.

47. The Whitworth thread is the standard thread of Great Britain, its profile being similar to the U. S. Standard The angle between the sides is 55° instead of 60°, the tops and bottoms being rounded off $\frac{1}{6}$ the depth instead of being flattened off $\frac{1}{8}$ the depth. The proportions are shown in Fig. 40. The pitch

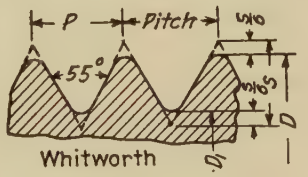

Fig. 40.

$P=\frac{1}{N}$, where $N=$number of threads per inch$=0.08D+0.04$

nearly, or $N=\frac{9D+67}{8D+2}$ nearly. D=the outside diameter of thread. The depth of tooth is $\frac{S}{6}$ where S=depth of a V thread having the same pitch. The diameter at root=$D_1=D-\frac{1.2806}{N}$, where D=the outside diameter of thread. The area of the circle D_1 diameter is the area used for calculating the tensile strength of the cylinder whose outside diameter is D.

48. The International Standard thread is the system recommended by the congress held in Zurich on October 24, 1898. The thread is a modification of the metric system in use in France, the bottom being rounded instead of flat. See Fig. 41. The

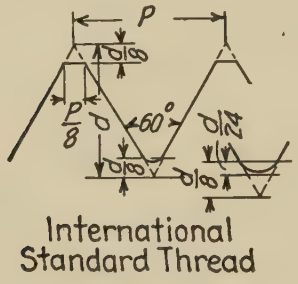

Fig. 41.

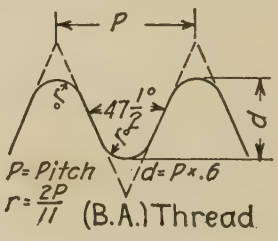

Fig. 42.

metric system thread is the same as the U. S. Standard in Fig. 39. P=pitch, $d=P\times.6495$. All dimensions for this system are given in millimeters. The pitch of the threads for different diameters of metric and international systems will be found in Table 3, page 10.

49. The British Association Thread (B. A.) Standard was adopted in Great Britain for use on such work as small precision machinery and electrical fittings for small screws below $\frac{1}{4}''$ diameter. The size is denoted by a number. The angle between the sides of the thread is 47.5° and the depth of thread is .6 the pitch. The tops and bottoms are rounded off.

Fig. 42 shows the profile of this thread and the proportions used in making it.

50. British makers through their standards committee have recommended a thread of finer pitch than the Whitworth standard but of the same form. These threads are used for bolts subjected

to excessive shock and vibration, as on crossheads, connecting rod ends, main bearings, piston rods, valve rods, etc. The diameter at root $D_1 = 0.95D - 0.07$. When D = the outside diameter of thread; pitch $= P = \frac{1}{10}\sqrt[3]{D^2}$ for sizes up to 1″. From 1″ to 6″ $P = \frac{1}{10}\sqrt{D^5}$. The number of threads per inch N is given in Table 3. These are called the *British Standard Fine Threads.* In the United States the Association of Licensed Automobile Manufacturers have adopted a finer pitch for automobile use than the U. S. Standard, although the thread has the same proportions as the U. S. St. The number of threads per inch will be found in Table 3.

51. The influence of the pitch of thread on the strength of a cylinder is quite marked. In some cases by doubling the number of threads per inch the strength can be increased 20% or even more. Fine threads are more apt to be injured in handling and erecting. Table 3 shows the relative strength of cylinders of given diameters having threads of varying pitch.

Whenever tightness is desired rather than any other feature it is advisable to use finer threads than the number given in the U. S. Standard table, that is, approximately the number given for the British Standard fine thread.

Pipe Thread

52. Pipe thread is used on the conical ends of wrought iron pipe and in the holes and fittings into which these pipes enter. The pitch is finer than the standard pitch for a cylinder of the same diameter as the outside of the pipe. This is for the purpose of insuring tightness of joints rather than for strength. The shape of thread as designed by Mr. Briggs is shown in Fig. 43. The outside diameter of the pipe is D_0 which is not the same as the nominal diameter of pipe. The taper of the end of the pipe is 1 in 32 to the axis. The angle of the thread is 60°. The pitch P is found from Table 9 which gives the number of threads per inch N. Instead of having a depth equal to .866P, as in a V thread, the threads are rounded off at top and bottom so that the height E is reduced to $0.8\frac{1}{N}$, where N = threads per inch. The length of perfect thread extends from the end of the pipe back a distance $T = \frac{0.8D_0 + 4.8}{N}$, D_0 = external diameter

of pipe. Then come two threads with perfect bottoms and flat tops followed by several imperfect threads with flat tops and flat bottoms, which are produced by the chamfered mouth of the threading die. The thickness S of the material below the root of the thread at the end of the pipe will be found in Table 9 or it can be calculated from the formula $S = 0.0175D_0 + .025''$.

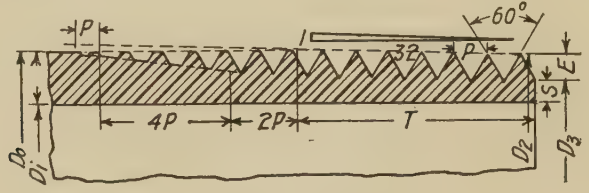

Fig. 43.—Section of Thread for Pipe.

The diameter at the end of the pipe is also given in Table 9, as well as the depth of thread. The bottom line of perfect thread is parallel to taper of end of pipe, then changes to slope up to the outside of pipe at a point $5P$ away, measured parallel to the axis of the pipe.

53. The threads used for transmitting power are either square or modifications of the square. The object is to reduce the tendency to burst the nut, by taking the pressure on a surface

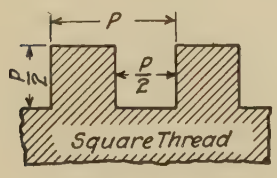

Fig. 44.

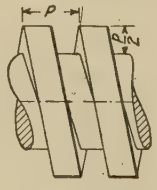

Fig. 45.
Sq. Thread.

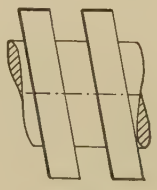

Fig. 46.
Conventional Sq. Thread.

which is at right angles to the axis of the screw. A square thread is shown in Fig. 44. It has *half* as *many threads* per inch as a V or U. S. Standard of the same diameter and is consequently only half as strong. Fig. 51 (*C*) shows the square thread accurately drawn, while Fig. 45 shows the helices replaced by straight lines. The *conventional* method of representing the square thread is shown in Fig. 46. The depth of space equals $\frac{P}{2}$ and the width between the inclined lines is also $\frac{P}{2}$.

54. The perpendicular sides of the square thread make it difficult to cut and also render difficult the engaging and disengaging of a split nut which is often used in power transmission, as on the lead screw of a lathe. For these reasons it is desirable to slope the sides of the square thread at a small angle. The thread so formed is called the Modified Square or Acme Standard

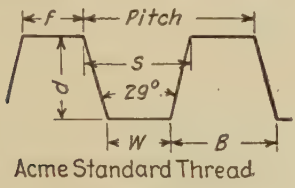

Fig. 47.

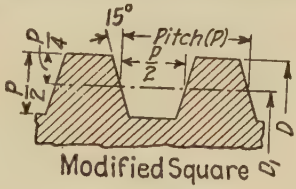

Fig. 48.

thread. The angle of its sides is 29° and the width of flat at the top is $f = .3707P$. The depth is $d = \frac{P}{2} + .01''$. Fig. 47 shows the shape of the thread profile as it actually is, while Fig. 48 shows the thread as it is usually represented on a drawing. The representation with helices drawn is shown at (*D*) in Fig. 51. When these are replaced by straight lines we have the representation as shown in Fig. 49, which is the conventional representation.

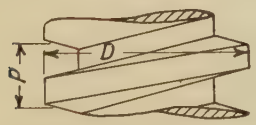

Fig. 49.—Conventional Acme or Modified Sq. Thread.

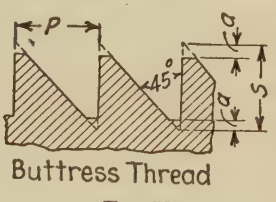

Fig. 50.

After taking the outside diameter D the mean diameter D_1 is then laid out equal to $\left(D - \frac{P}{2}\right)$, and the teeth constructed on the lines drawn through the extremities of the D_1 diameter parallel to the axis. The slope of the sides can be 15° but the *real angle* $14\frac{1}{2}°$ must be given on the drawing. The number of threads per inch is given in the following list.

1	$1\frac{1}{3}$	2	3.3	4	5	6	7	8	9	10	(Thds. per in.)
1	.75	.5	.666	.25	.2	.166	.142	.125	.1111	.10	Pitch of single thread.

55. The **Buttress thread** is used where pressure is exerted in one direction only as in screw presses or cannon breech blocks. The profile is shown in Fig. 50 and the dimensions are $S=P$. $a=\frac{P}{8}=\frac{S}{8}$, the angle of one side with the vertical is 45°, the other side being perpendicular to the axis.

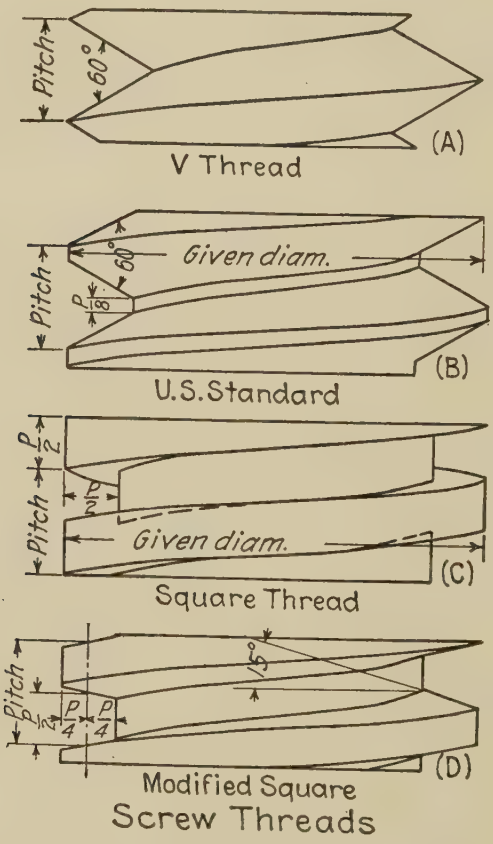

Fig. 51.

56. So far the threads considered have been single threads, and the pitch has been the distance from one crest to the next. If we wish to give the nut in which the screw rotates, an axial movement twice as great, we must either increase the pitch by cutting a coarser thread, which means a deeper cut in the

cylinder, or we must cut two parallel threads on the cylinder. The cutting of a coarse thread will reduce the strength of the cylinder. If we cut two parallel threads the depth of thread and distance between the points or crests will remain the same as for a single thread, but the pitch will be the distance between every other crest. In a single thread a crest on one side of the cylinder is opposite a root on the opposite side. In a double thread the crest of one thread is opposite the crest of the other.

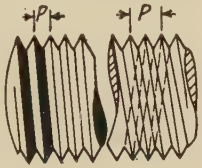

FIG. 52.

Fig. 52 shows the difference in appearance of a single thread and double threads cut on the same cylinder. P in the second figure is double the P in the first.

It is customary to indicate on a drawing the pitch wanted by giving the number of threads per inch as 20 *p.i.* The word double, triple, quadruple, etc., is used also in case of multiple threads, as: 10 *p.i.* double.

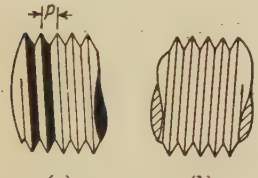

FIG. 53.
Right and Left Threads.

Threads are either right hand or left hand and are represented by right or left hand slopes as shown in Fig. 53; (*a*) is a right hand and (*b*) is left hand. The *conventional* representation for V or U. S. St. threads is like Fig. 38, instead of that shown in Fig. 53.

57. Calculations which concern the tensile strength of threaded cylinders are based on the area of the circle whose diameter is that the root of the thread, not the outside diameter. Table 3 gives the areas at the root of cylinders threaded with various pitched threads according to different systems. The strength of U. S. St. threads for a strain of 1000 lbs. per square inch of area at the root will be found in column F, Table 1. For any other strain desired, multiply the tabular value by the required strain divided by 1000. As an example suppose it is required to find the load a bolt 1″ diameter will sustain if the material is to be strained to 5000 lbs. per square inch.

The table gives 551 lbs. for a strain of 1000 lbs. per square inch. This will be multiplied by $\frac{5000}{1000}$, which gives $551 \times 5 = 2755$ lbs.

Helical Springs

58. The representation of helical springs properly comes up in connection with screw threads only because they are both

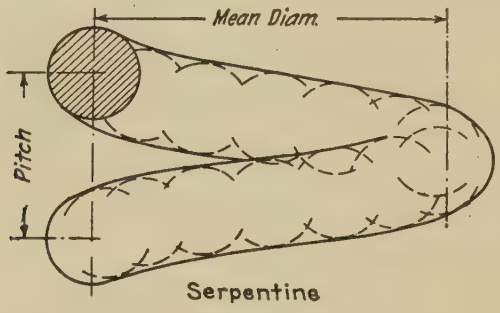

Fig. 54.

based on the helix. The spring made of wire whose cross-section is a circle is delineated by constructing the helix whose pitch is the pitch of one coil and diameter equal to the mean diameter

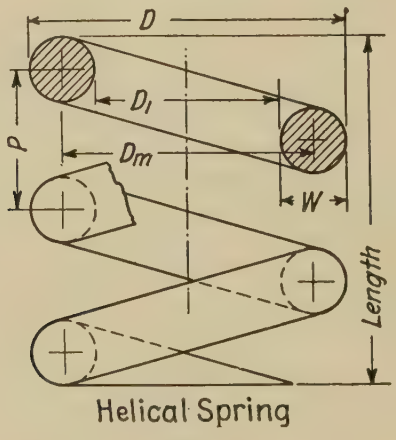

Fig. 55.

of the coil of wire. A sphere with a diameter equal to the diameter of the wire is then drawn in a number of positions which center on the helix. The lines tangent to these circles representing the spheres, will be the lines forming the apparent

contour of the spring. The construction of a coil of wire by this method is shown in Fig. 54.

This is too laborious for showing springs as usually required on drawings. An easier, but fully as representative method, will be found in Fig. 55. The helices of Fig. 54 have been replaced by straight lines drawn tangent to circles whose centers are on the cylinder with diameter Dm = the mean diameter. P is the pitch, D the outside diameter and D_1 the inside diameter of the coil. The diameter of wire used in making the spring is W. The view shows both section and outside.

If the wire has a square cross-section the circles in Fig. 55 will be replaced by squares.

59. Besides the screw threads mentioned above, which are used for screwing metal into metal, there are threads used for screwing metal into wood. The wood screw threads differ from the threads already shown in the shape and distance apart of the threads. They are thin, sharp and far apart, which enables them to cut their way into the wood and give plenty of wood between for holding. The body of the screw is tapering and gimlet pointed to enable it to enter the wood easily. The form of thread is shown approximately by the lag screw of Fig. 56.

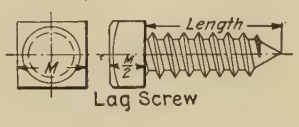

FIG. 56.

INSTRUCTIONS

One Exercise of 2 hours allowed in class. Av. total hours required, 2.6. Scale full size. Paper No. 1. *Fig.* 1 to be a profile of a (*a*) thread, (2 crests and 1 space) whose pitch is (*b''*). Dimension this figure and name beneath.

Fig. 2 to be a profile of a (*c*) thread (2 crests etc.), pitch (*d''*). Other directions as above.

Fig. 3 to be a section of thread for a (*e''*) pipe (scale double size). Dimension completely with decimals, name and scale below it.

Fig. 4 to be a profile of an (*f*) thread full size, (*g*) threads per inch, dimension and name.

Fig. 5. Make an outside view of a cylinder (*h''*) diam. threaded with an (*i*) thread, (2 crests), (*k*) threads per inch, full size, dimension and name.

Fig. 6. Draw a conventional V thread as cut on a (l'') diam cyl. (m) hand.

Fig. 7. Draw a helical spring of (n'') pitch, (3 coils) $Dm = (\quad '')$, $W = (\quad '')$ half in section and half elevation, full size dimensioned.

"Screw Threads and Spring" is the name of the plate.

TABLE OF DATA FOR PLATE ON SCREW THREADS AND SPRING

	Fig. 1.		Fig. 2.		Fig. 3.	Fig. 4.		Fig. 5.			Fig. 6.		Fig. 7.		
	a	b''	c	d''	e''	f	g''	h''	i	k''	l''	m''	n''	Dm''	W''
1	V	1	U. S. S.	$\frac{7}{8}$	2	Sq.	4	1	Acme	1	$\frac{3}{4}$	Rgt.	1	2	$\frac{1}{4}$
2	V	$1\frac{1}{8}$	"	1	$2\frac{1}{2}$	"	3	$1\frac{1}{2}$	"	1	1	Lft.	1	$1\frac{1}{2}$	$\frac{1}{2}$
3	V	$1\frac{1}{4}$	"	$1\frac{1}{8}$	3	"	2	$1\frac{3}{4}$	"	1	$1\frac{1}{4}$	R.	1	$2\frac{1}{4}$	$\frac{3}{8}$
4	V	$\frac{7}{8}$	"	$\frac{5}{8}$	$3\frac{1}{2}$	"	1	2	"	$1\frac{1}{3}$	$1\frac{1}{4}$	L.	$\frac{7}{8}$	2	$\frac{1}{4}$
5	V	$\frac{3}{4}$	"	$\frac{3}{4}$	4	"	$1\frac{1}{3}$	$1\frac{1}{2}$	"	$1\frac{1}{3}$	$\frac{3}{4}$	L.	$\frac{7}{8}$	2	$\frac{1}{2}$
6	V	$\frac{5}{8}$	"	$1\frac{1}{16}$	$1\frac{1}{2}$	"	$1\frac{1}{2}$	2	"	2	1	R.	$\frac{7}{8}$	2	$\frac{3}{8}$
7	V	$\frac{15}{16}$	"	$1\frac{1}{4}$	3	"	5	$1\frac{1}{2}$	"	2	$1\frac{1}{8}$	L.	$\frac{3}{4}$	2	$\frac{1}{4}$
8	V	$1\frac{1}{16}$	"	$\frac{15}{16}$	$3\frac{1}{2}$	"	4	$1\frac{3}{4}$	"	2	$1\frac{1}{8}$	R.	$\frac{3}{4}$	2	$\frac{3}{16}$
9	Whit.	1	Met.	$\frac{7}{8}$	3	B.A.	1"	1	Inter	–	1	Doub R	1	Sq.	
10	"	$1\frac{1}{4}$	Met.	1	$2\frac{1}{2}$	"	$1\frac{1}{4}$"	1	"	–	$1\frac{1}{8}$	Doub L	1	2	$\frac{3}{4}$

CHAPTER V

SCREWS AND BOLTS

60. If the parts of a machine have to be removed or adjusted it becomes necessary to fasten them in place by fastenings easily disconnected. The simplest and most common form of fastening of this kind is a cylinder threaded at one end and with a head of some kind formed on the other. These fastenings are called SCREWS or BOLTS. Under the first heading will be found *Cap Screws, Machine Screws, Set Screws, Lag Screws,* and *Wood Screws;* under the second, *Tap Bolts, Coupling Bolts* (with nuts), *U. S. St. Bolts* and nuts, *Mfg.'s Standard Bolts* and *Stud Bolts* and nuts. There are many shapes of heads used on both screws and bolts. Those screws whose heads are cylindrical are provided with slots in order to turn them with a screw driver. These are shown in Fig. 57 and are called *Cap Screws* and *Machine Screws.* If the curve on the head of the filister head screw is omitted, the head becomes a *round* head. The button head is a hemisphere capping a short cylinder of the same diameter. The flat head screw becomes a French head when the top is curved as shown by the dotted curve.

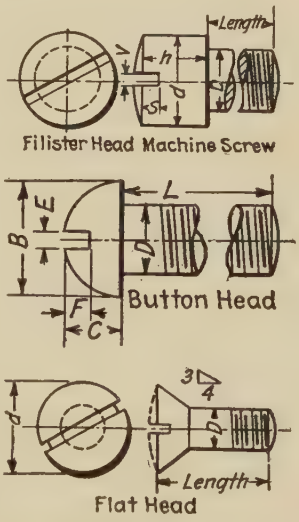

FIG. 57.—Machine Screws.

61. If the diameter of these screws is less than half an inch they are called *machine* screws and the diameter is given by a screw gauge number. The dimensions of these heads and slots are as follows:

FILISTER HEAD: d as given in column 12, Table 1, $h=D$. slot $V=\frac{1}{2}S$, $S=\frac{3}{8}D$.

BUTTON HEAD: Radius of hemisphere $=\frac{B}{2}$, $C=D$.

B is given in Table 1, column 15, slot same as for filister heads.

FLAT HEAD: d is given in Table 1, column 14, slope of sides as shown in Fig. 57, or angle between sloping sides $=82°$. Slot same as for other screws.

The radius of the curved top of the filister and French heads is $=3D$. This can be easily obtained by measuring D three times with the compasses. This is quicker than multiplying D by 3 and laying off the dimension with a scale. The threaded ends of cylinders used for screws and bolts are finished off on drawings by rounding with a radius equal to $2D$ as shown at (A), Fig. 58, or by beveling them at 45° as shown at (B). The threads are not drawn beyond the end of the cylindrical portion.

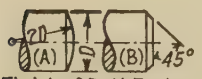

Finish of Bolt Ends
FIG. 58.

In general, conventional threads only are represented on drawings.

62. If the heads of screws and bolts are not made cylindrical they are either square or hexagonal and a wrench or spanner is used to turn the screws into the threaded hole which holds

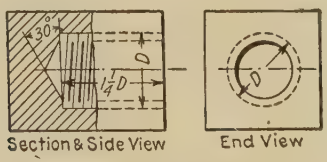

FIG. 59.—Tapped Hole.

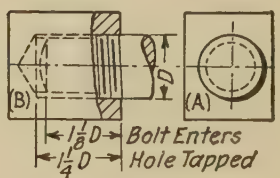

FIG. 60.

them. This threaded hole is called a *tapped* hole because the thread is cut in it with a *tap*. The hole is drilled before tapping, the conical form of the bottom of the hole being due to the drill point. A *tapped hole* is shown partly in section in Fig. 59. The depth is $1\frac{1}{4}$ times the diameter. If there is no bolt end in the hole the threads of the hole (when in section) appear left handed.

The distance the screwed end enters the hole is shown in Fig. 60. Compare also the end views of a tapped hole without the bolt in it, as in Fig. 59, with that containing the bolt end in Fig. 60.

63. Cap Screws having other heads than round ones are the Sq. Hd. and Hex. Hd. Screws shown in Fig. 61. The dimen-

Fig. 61.

sions of the sq. hd. are given in Table 1, columns 10 and 11, or may be computed from the following formulæ:

$E = D + \frac{1}{8}''$ for $D = \frac{1}{4}''$ to $\frac{3}{4}''$ (inc.).
$E = D + \frac{1}{4}''$ for $D = \frac{7}{8}''$ and upwards.
$H = D$ for all sizes.

The dimensions of the hex. hd. cap screws will be found in columns 8 and 9, Table 1, or may be calculated from the formulæ,

$G = D + \frac{3}{16}''$ for $D = \frac{1}{4}''$ to $\frac{7}{16}''$ (inc.).
$G = D + \frac{1}{4}''$ for $D = \frac{1}{2}''$ to $1\frac{1}{2}''$ (inc.).
$H = D$ for all sizes.

The square heads are rounded with a radius equal to $3D$ as shown in Fig. 62. This view shows one face of the square while the two faces are visible in Fig. 61. The dotted lines in Fig. 62 show where the corners will appear when two faces are visible. The hexagonal head cap screw is chamfered (beveled) by a cone. This protects the corners from injury. The angle of the cone surface with the edges of the head is taken as 60° or 45°. The curves on the faces called chamfer curves are hyperbolas since they are

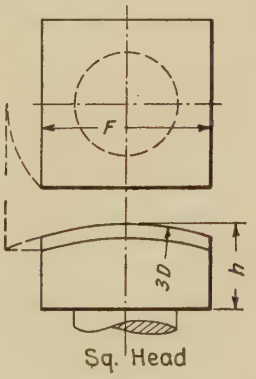

Fig. 62.

sections of a conical surface cut by planes parallel to the axis. These curves are drawn with circular arcs as shown in Fig. 69, which illustrates the construction and delineation of the U. S. St. hex. hd. for a bolt. The cap screw head is smaller across flats than the U. S. St. bolt head and requires less room for turning.

64. Whenever a hexagon is drawn it is *circumscribed* about a circle whose diameter is the distance across flats. To draw a hexagon proceed as follows, referring to Fig. 63 for numbers. (*F*) is for a hex. whose long diameter is parallel to the T square blade, while (*G*) is for the position of the long diameter perpendicular to the blade. In (*F*) draw 1–2–3 lightly with T sq., then draw 4 and 5 heavy with triangle, reverse triangle and draw 6 and 7 heavy. Then go over 1 and 3 with T square, making them heavy between 4 and 6 and 5 and 7. In (*G*) all the lines are drawn with triangle instead of with T sq. and triangle.

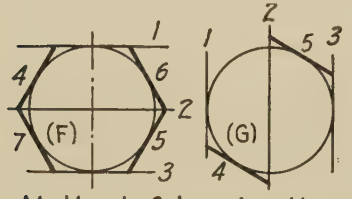

FIG. 63.

The long diameter or diameter across corners of a hexagon equals 1.155 times the distance across flats. That of a square is 1.414 times the distance across flats. This shows that a square head requires 23% more space for clearance in turning than a hex. hd. having the same distance across flats.

The governing dimensions of the screws previously mentioned are, 1, the diameter of body (*D*). 2, style of head. 3, length used in ordering as indicated by L or word *length* in preceding figures. 4, length of threaded portion (usually $= \frac{3}{4}$ the length given by 3). 5, number of threads per inch if different from standard number. The length 3 is determined from the thickness of the loose part which the screw holds in position, called the grip, plus the amount which enters the tapped hole equal to $1\frac{1}{8}D$.

65. Lag Screws are used for fastening machines to wooden floors, wooden joists, etc., and have sq. heads chamfered at 45°. The body is threaded with a wood screw thread to give it more holding power in wood. The proportions of head are shown in Fig. 64 as well as the shape and general method of representation. $M = \frac{3}{2}D$. The chamfer circle in the end view is usually

drawn tangent to the sides of the square and the *chamfered corners omitted* in the front view.

66. Wood Screws usually have flat heads like that shown in Fig. 57, with the angle between the sloping sides of the cone equal to 82°. There are other styles of head. The diameter of body is given by a screw gauge number, the sizes running from 0 to 30. The lengths run from $\frac{1}{4}''$ to 6″ with threaded portion equal to $\frac{7}{10}$ the total length of screw.

Fig. 64.

67. In all the screws thus far mentioned the mode of fastening is to drill a hole through the smaller of the parts to be joined and tap a hole in the larger part. The screw is then put through the drilled hole and screwed into the tapped hole until its head pinches the two parts together.

68. If a part of a machine must be often removed, the screw must be taken out of the tapped hole at each removal, thus wearing the threads in the hole. In order to obviate the wear in cases of this kind a *stud* bolt is used. A stud bolt is a cylinder threaded at both ends. One end is firmly screwed into the tapped hole and remains there permanently. The other end projects through the loose part of the machine far enough to take a *nut* which screws on the end and presses the loose piece against the stationary part. By removing the nut the parts can easily be separated and the wear of the unscrewing and screwing will come on the threads of the stud and nut. A stud bolt with hex. nut is shown in Fig. 65. The threaded end C screws into the tapped hole and has a length of thread equal to $1\frac{1}{8}D$. B is equal to the thickness of loose part (grip) minus $\frac{1}{4}''$. A equals the depth of nut (H) plus $\frac{1}{4}''$. $H=D$, $F=\frac{3}{2}D+\frac{1}{8}''$. A hex. nut can be drawn by the conventional method shown in Fig. 69 instead of the method shown in Fig. 67. When the nut is tightly screwed against the part which it holds in place, its top should be flush with the cylindrical end of the bolt, not as represented in Fig. 65.

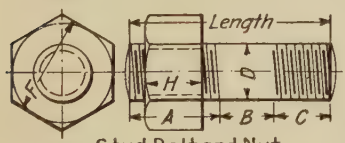

Fig. 65.

Stud bolts are used in steam engine and pump cylinder heads, steam chest covers, and in all places where frequent removals would tend to wear the threads in a tapped hole.

Test No. 1. Arts. 31–68. (2 hours allowed)

1. Show to scale the cross-section of a 5″ channel. The flange width is $1\frac{3}{4}$″, thickness of web $\frac{3}{16}$″, gauge line $1\frac{1}{2}$″ from back of web. Rivet $\frac{1}{2}$″.

2. Sketch the outline of 3 styles of rivet heads and name each one.

3. Sketch a single riveted lap joint and indicate the "pitch" of the rivets.

4. Using your scale for C. I. fittings, construct full size a $2'' \times 1\frac{1}{4}''$ reducing tee (standard pattern). Dimension the drawing completely so that the tee can be made from your drawing.

5. Show a short length of a cyl. 2″ diam. threaded with a double V thread, right hand, $\frac{1}{2}$″ pitch. (Do not construct helices.)

6. Make a working drawing of a stud bolt without a nut. Diam. $\frac{7}{8}$″, grip $= 1\frac{1}{4}$″, give total length, distance threaded and not threaded.

Test No. 2. Arts. 31–69. (2 hours allowed.)

1. Show to scale the cross-section of a $4'' \times 2\frac{7}{8}''$ Z bar. Web thickness $= \frac{1}{4}$″, gauge line $1\frac{3}{4}$″ from back of web. Rivet $= \frac{7}{8}$″.

2. Sketch a double riveted lap joint when $P - d = 3''$, $P_1 = .6(P - d) + d$, The plates are $\frac{5}{16}$″ thick. Use button head rivets.

3. Using your scale for C. I. fittings for W. I. pipe, construct full size a $3'' \times 1\frac{1}{2}''$ reducing tee (Standard pattern). Show half the front view in section. Dimension your drawing so that the tee can be made from it.

4. Show a short length of cyl. $2\frac{1}{2}$″ diam. threaded with a mod. sq. thread of $\frac{1}{2}$″ pitch. Thread is left hand double (use straight lines for helices).

5. A tap bolt is to be made for a $1\frac{1}{2}$″ grip. $\frac{3}{4}$″ diam.

$$F = \frac{3}{2}D + \frac{1''}{8}$$

$$h = \frac{F}{2}.$$

Make a drawing of this bolt showing its length, length of thread, head, etc.

69. Tap Bolts are like cap screws in having a hex. head on one end of a threaded cylinder. The head is thinner and wider

across flats than the cap screw head. Fig. 66 shows a tap bolt head. The formula for F is the U. S. Standard $F=\frac{3}{2}D+\frac{1}{8}''$. The body is threaded $\frac{3}{4}$ its length. The dimensions of these heads will be found in Table 1, columns 4 and 5. The manufacturers of bolts make a tap bolt with a head so proportioned as to permit of its being made at one upset thus reducing the cost. This is called the *Manufacturers' Standard* tap bolt and $F=1\frac{1}{2}D$. The dimensions of these heads are given in Table 1, columns 6 and 7.

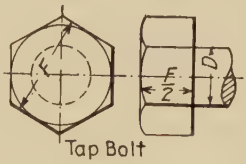

Fig. 66.

70. A Through Bolt is used to fasten two pieces together when there is room for the bolt to pass entirely through both pieces and take a nut on the projecting end. The head is either hexagonal or square and the nut is the same. Square heads and nuts are used on rough work principally.

The dimensions of through bolt heads and nuts are based on formulæ adopted by manufacturers throughout the United States and called U. S. Standard formulæ.

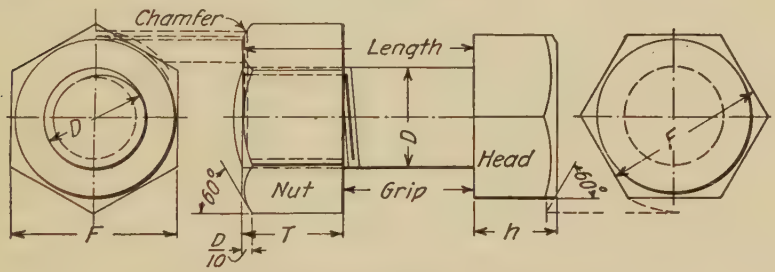

Fig. 67.—U. S. Standard Bolt and Nut.

Fig. 67 shows a complete through bolt with hex. hd. and nut. The formulæ for obtaining the values of the letters when D is known are

$$T=D,\quad F=1.5D+\tfrac{1}{8}'',\quad h=\frac{F}{2}.$$

These formulæ hold for square or hexagonal forms. The long diameter of the hex. $=1.155F$, that of the square $1.414\ F$.

In Table 1, columns 2, 3, 4, 5 will be found the dimensions of heads and nuts for values of D given in column 1. Fig. 68

is a scale for obtaining the dimensions of a U. S. S. bolt head and nut, by measuring with the compass. For conventional

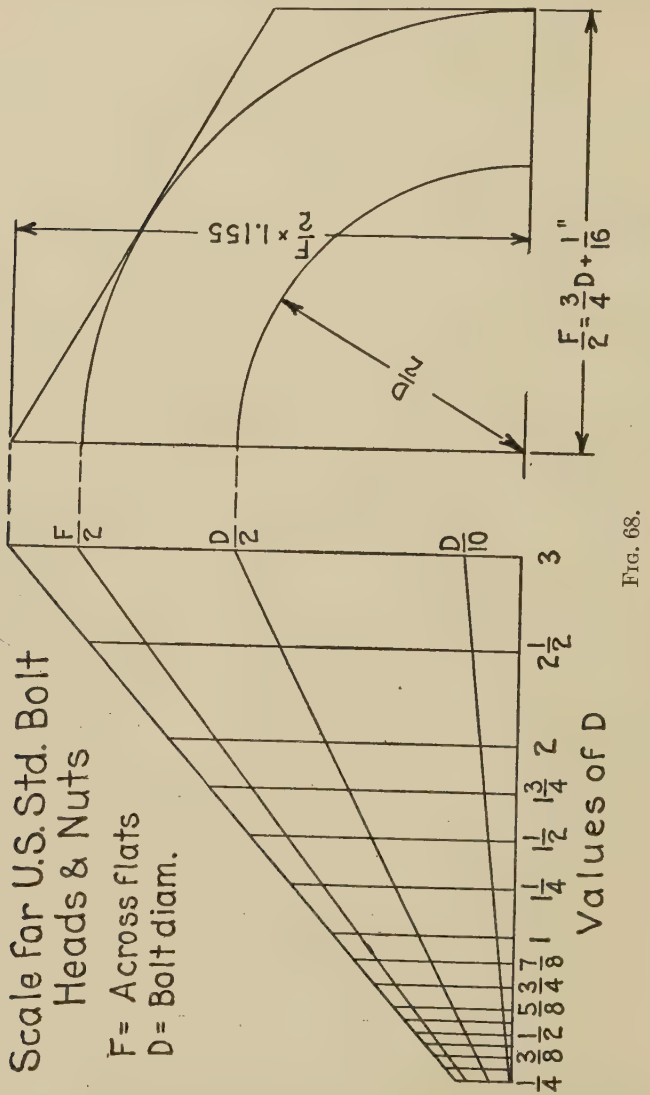
F/2 × 1.155
D/2
F/2 = 3/4 D + 1/16"
F/2
D/2
D/10
Scale for U.S. Std. Bolt Heads & Nuts
F = Across flats
D = Bolt diam.
1/4 3/8 1/2 5/8 3/4 7/8 1 1 1/4 1 1/2 1 3/4 2 2 1/2 3
Values of D

Fig. 68.

representation of U. S. S. nuts and heads on drawings, the long diameter of the hex. may be taken as twice the bolt diameter and the diatance across flats as $1\frac{3}{4}$ the bolt diameter. This is

exact for a $\frac{5}{8}''$ nut but is too small for sizes below $\frac{5}{8}$ and too large for sizes above. The method of drawing chamfer curves conventionally is shown in Fig. 69. If one view of a nut is given the dimension across flats or long diameter—whichever required—for the other view, may be found graphically by drawing a 30°

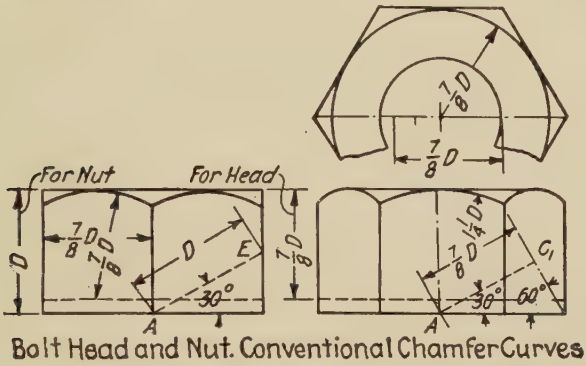

Fig. 69.

line from the center of the given view as shown in the views of Fig. 69, either to meet the outside vertical line as in the view of the two faces AE, or until it meets a 60° line as in the view of the three faces at AC_1. AE equals D and $AC_1 = \frac{7}{8}D$.

71. A square nut with spherical top is shown in Fig. 71. The hole for the bolt cuts out the top of the sphere, leaving a

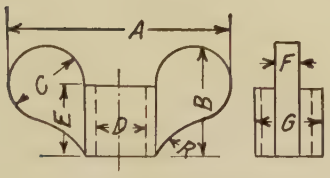

Fig. 70.—Wing Nut.

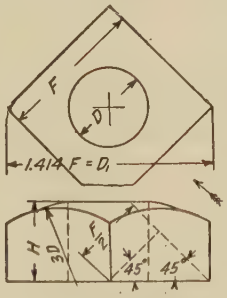

Fig. 71.—Sq. Nut.

flat which must be allowed for in drawing the curve of the top. $F = \frac{3}{2}D + \frac{1}{8}''$ for U. S. S. nuts and bolt heads. $H = D$ for nuts, $h = \frac{F}{2}$ for heads.

72. Wing nuts are often used on bolts from $\frac{1}{8}$ to $\frac{1}{2}''$ diameter. They are designed to be turned by the thumb and finger and are sometimes called thumb nuts. Their dimensions as shown by letters in Fig. 70 will be found in Table 15*b* below.

TABLE 15*b*

WING NUTS

D	*A*	*B*	*C*	*E*	*F*	*G*	*R*
$\frac{1}{8}$	$\frac{19}{32}$	$\frac{11}{32}$	$\frac{7}{32}$	$\frac{5}{32}$	$\frac{3}{32}$	$\frac{7}{32}$	$\frac{9}{32}$
$\frac{5}{32}$	$\frac{13}{16}$	$\frac{17}{32}$	$\frac{5}{16}$	$\frac{1}{4}$	$\frac{1}{8}$	$\frac{1}{4}$	$\frac{9}{32}$
$\frac{1}{4}$	$1\frac{3}{16}$	$\frac{5}{8}$	$\frac{3}{8}$	$\frac{3}{8}$	$\frac{1}{8}$	$\frac{7}{16}$	$\frac{5}{16}$
$\frac{5}{16}$	$1\frac{1}{2}$	$\frac{3}{4}$	$\frac{1}{2}$	$\frac{7}{16}$	$\frac{5}{32}$	$\frac{1}{2}$	$\frac{7}{16}$
$\frac{3}{8}$	$1\frac{5}{8}$	$\frac{13}{16}$	$\frac{9}{16}$	$\frac{1}{2}$	$\frac{5}{32}$	$\frac{1}{2}$	$\frac{7}{16}$
$\frac{7}{16}$	$1\frac{15}{16}$	$\frac{7}{8}$	$\frac{5}{8}$	$\frac{9}{16}$	$\frac{5}{32}$	$\frac{5}{8}$	$\frac{1}{2}$
$\frac{1}{2}$	$2\frac{5}{16}$	$1\frac{1}{16}$	$\frac{3}{4}$	$\frac{11}{16}$	$\frac{5}{32}$	$\frac{3}{4}$	$\frac{3}{4}$

73. The *length* of a bolt is the distance measured from the under side of the head to the end of the threaded shank and does *not* include the rounded or beveled end. The *grip* is the thickness of the material to be clamped between the head and nut. In listing or ordering bolts the following dimensions and data are necessary:

1, number wanted; 2, diameter; 3, kind of head; 4, length; 5, grip; 6, location.

74. Besides the bolts already mentioned, there are **Coupling Bolts,** whose heads have the same dimensions as U. S. St. nuts. They are provided with U. S. St. nuts and are used on flanged shaft couplings.

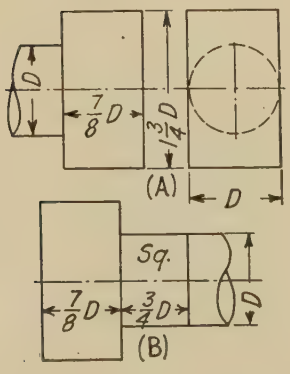

FIG. 72.—Tee Head Bolts.

Tee Head Bolts used to fasten down work on planer carriages, testing floors, etc., where slots are made with wider spaces beneath. The heads are made as at (*A*) in Fig. 72 so as to pass through the slots and then turn through 90° in the space, or the bolts are pushed into the slot from the end and have a square on the shank to prevent turning in the slot as (*B*).

Swing Eye Bolts have a head cylindrical in shape through which a pin can be passed perpendicular to the axis of the bolt. The dimensions may be taken as $A = 1\frac{7}{8}D$, $B = D$, $C = 1\frac{1}{4}D$. This is shown in Fig. 73.

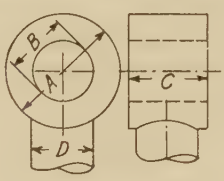

Fig. 73.
Swing Eye Bolt.

75. Foundation Bolts are used for holding machine frames, engine beds, roof trusses, etc., to concrete or masonry foundations. They are divided into two classes, viz., those imbedded in the masonry and those passing through it.

The Lewis bolt and rag bolt belong to the first class and the cottered bolt to the second. The rag bolt shown in Fig. 74 has the shank tapered of pyramidal form with jagged edges. A hole wider at the bottom than at the top is cut in the stone. The bolt is then placed in position and molten lead or sulphur poured in the space between the stone and head. Of course this bolt is difficult to remove and is used for permanent fastenings.

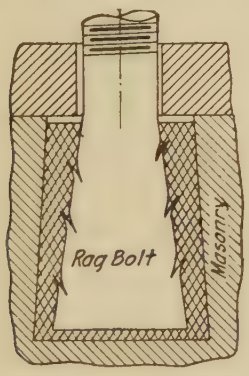

Fig. 74.

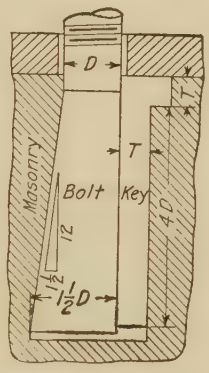

Fig. 75.—Lewis Bolt.

The **Lewis Bolt** has a shank of rectangular section. One side of the head is parallel to the center line of the bolt and the other tapering as shown in Fig. 75. To fix the bolt in position it is dropped in the hole and moved over against the tapering side of the hole, after which the key is dropped in. Tightening the nut wedges the head and key firmly in the hole. There should be some clearance below the head to facilitate the removal of

the bolt. The taper is about $1\frac{1}{2}''$ to $12''$. Key thickness T equal to $\frac{D}{2}$.

The **Cottered Bolt** passes clear through the masonry, and has a washer and cotter at its lower end. D_1 is the diameter at the root of thread when the outside diameter at the threaded end is D. D_2 is the diameter at the cottered end, which is greater than D, to compensate for the material cut out for the cotter hole.

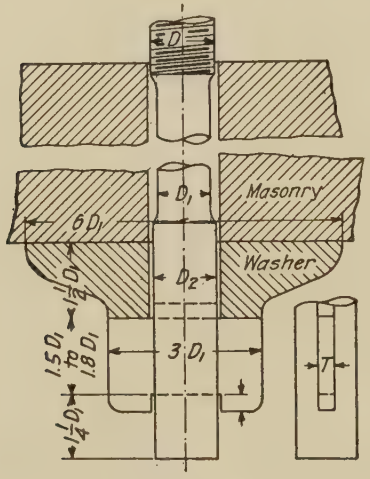

Fig. 76.—Cottered Bolt.

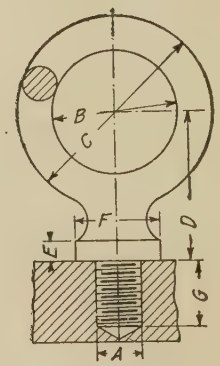

Fig. 77.—Lifting Eye Bolt.

If D_1 is the diameter of the rod at root then the thickness T of cotter may be $\frac{1}{4}D_1$, $D_2 = 1\frac{1}{4}D_1$. The other dimensions are given on the sketch shown in Fig. 76.

Lifting Eye Bolts are used for the purpose of attaching a hoisting rope or hook. Fig. 77 shows the general outline. The dimensions are as given in the table.

Eye Bolt Dimensions

A	*B*	*C*	*D*	*E*	*F*	*G*
$\frac{3}{8}$	2	$2\frac{5}{8}$	$1\frac{3}{4}$	$\frac{3}{16}$	$\frac{3}{4}$	$\frac{7}{8}$
$\frac{1}{2}$	$2\frac{1}{8}$	$2\frac{7}{8}$	$2\frac{1}{16}$	$\frac{1}{4}$	1	1
$\frac{5}{8}$	$2\frac{1}{4}$	$3\frac{1}{4}$	$2\frac{3}{8}$	$\frac{5}{16}$	$1\frac{1}{4}$	$1\frac{1}{8}$
$\frac{3}{4}$	$2\frac{3}{8}$	$3\frac{1}{2}$	$2\frac{5}{8}$	$\frac{5}{16}$	$1\frac{7}{16}$	$1\frac{1}{4}$
$\frac{7}{8}$	$2\frac{1}{2}$	$3\frac{3}{4}$	$2\frac{15}{16}$	$\frac{3}{8}$	$1\frac{11}{16}$	$1\frac{3}{8}$
1	$2\frac{3}{4}$	$4\frac{1}{4}$	$3\frac{1}{4}$	$\frac{7}{16}$	$1\frac{7}{8}$	$1\frac{1}{2}$

76. When bolts and nuts are used on machines subject to excessive vibration the nuts tend to work loose and then work off the bolt. To prevent this, various methods of locking them have been devised, the best known and most common one being the locknut. This is an extra nut screwed tightly against the regular nut to jam or lock it on the bolt.

The nut used for this locking is usually half as thick as a U. S. St. nut and is chamfered on both ends.

Since the top nut takes all the load it should be the larger one; but owing to the difficulty of turning a thin nut with a standard wrench, when placed beneath a standard nut, in practice the thin nut is placed on top.

Quite often when two nuts are used as above, the standard nut and the locknut are each made one-half the total thickness of the two together, that is, each one is $\frac{3}{4}$ as thick as a standard nut.

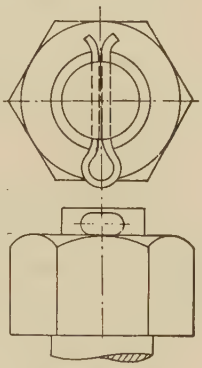

FIG. 78.

Sometimes the end of the bolt which projects beyond the nut is turned down to the diameter at the root of the threads and a hole is drilled through it close to the nut. A split cotter pin is put through this hole and the split ends spread apart. See Fig. 78. This prevents the nut from working loose. The dimensions of split pins will be found in Table 12, page 16.

77. The Association of Licensed Automobile Manufacturers has recommended for automobile work a bolt with threads of finer pitch than the U. S. St. number, and also a castle nut or capstan nut. The material of the bolt and nut is high grade steel having a tensile strength of 100,000 lbs. per sq.in. and an elastic limit of 60,000 lbs. per sq.in.

The forms of nut and head and their dimensions are shown in Table 14. The cotter pins are those shown in Table 12 and called split pins. A hole is drilled through the bolt so that when the nut is screwed on tight, this hole lines up with one of the slotted holes in the nut. The split pin is then pushed through nut and bolt and opened at the split end to prevent it from backing out of the hole. This prevents the nut from loosening. On the bolts for connecting rod ends and on piston rod ends a Penn

or Ring nut is often used. See Fig. 79. The part (*A*) of the rod is counterbored to take the lower part of the nut which is turned to fit and also grooved. A set screw passes through *A* and bears against the bottom of the groove, thus locking the nut. The principal dimensions are also given in Fig. 79. The diameter of the turned part of the nut is a trifle less than the distance across flats.

78. A spring washer is also used to prevent a nut from working off. It consists of a piece of spring steel forming a portion of a helicoid. This is slipped over the bolt and the nut is screwed on pressing the washer down between the nut and fixed surface of (*C*). The sharp edge of the washer cuts into the under

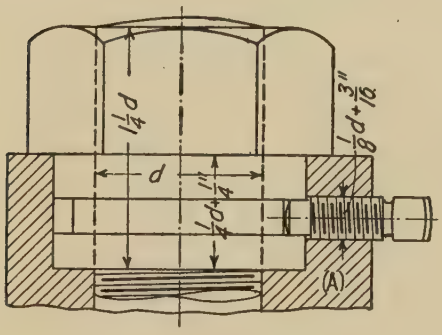

Fig. 79.—Penn or Ring Nut.

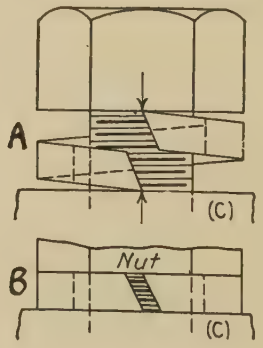

Fig. 80.—Spring Washer.

side of the nut, preventing any reversal of motion with consequent working off. *A* and *B* of Fig. 80 show the washer before and after screwing up the nut.

79. Washers. When the surface against which a nut presses is rough or uneven, a washer is used to provide a smooth surface for the nut to turn on. It is also used to distribute the pressure of the nut over a larger area, when the material, against which it bears, is not strong enough to resist the pressure.

Washers are also used under heads or nuts which bear against wood.

The diameters of U. S. St. washers are as follows:

The thickness is given by the wire gauge number or by the nearest fraction following.

From $d = \frac{1}{4}''$ to $\frac{3}{8}''$ (incl.) $D = 2d + \frac{1}{4}''$
From $d = \frac{7}{16}''$ to $\frac{9}{16}''$ (incl.) $D = 2d + \frac{3}{8}''$
From $d = \frac{5}{8}''$ to $2\frac{1}{4}''$ (incl.) $D = 2d + \frac{1}{2}''$

d = diam. of bolt,
D = outside diameter of washer.

Thickness of washer $= T$.

For $d = \frac{1}{4}''$ and $\frac{5}{16}''$	$T =$ No. 16 $= \frac{1}{16}''$
" $d = \frac{3}{8}''$ " $\frac{7}{16}''$	$T =$ No. 14 $= \frac{5}{64}''$
" $d = \frac{1}{2}''$ " $\frac{9}{16}''$	$T =$ No. 12 $= \frac{3}{32}''$
" $d = \frac{5}{8}''$ " $\frac{3}{4}''$	$T =$ No. 10 $= \frac{1}{8}''$
" $d = \frac{7}{8}''$ to $1\frac{1}{4}''$	$T =$ No. 9 $= \frac{5}{32}''$
" $d = 1\frac{3}{8}''$ " $2''$	$T =$ No. 8 $= \frac{11}{64}''$
" $d = 2\frac{1}{4}''$	$T =$ No. 6 $= \frac{3}{16}''$

80. Set Screws. Besides the bolts and screws already mentioned, there is a class of screws used to prevent relative motion between two machine parts in contact. This relative motion may be prevented by tapping a hole through one part and screwing a set screw through this hole until its point presses hard against the surface of the other part. It is evident that the pressure thus produced will not be sufficient to overcome any very great tendency to move, therefore set screws are used principally in cases where adjustment is needed, or some part is to be held in its proper position. They are made of iron or steel, case hardened. The point of the set screw may have to bear against a flat or curved surface; accordingly there are a variety of points. In Fig. 81 an oval point and cup point are shown. The radius

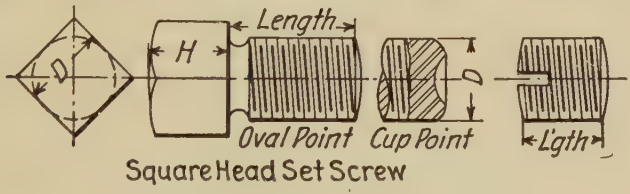

FIG. 81.

of the oval point is equal to D. The radius of the cup may be $\frac{D}{2}$, the slope of the beveled part being 60° with the sides of the threaded part. Instead of the rounded cup, a conical cup is often used which is made by a drill point.

A *cone* point is also used, the angle at the point being 60°. A flat point is occasionally found in adjusting screws, the end being beveled at 45° and the length of bevel being $\frac{D}{8}$.

Heads of set screws are square, with a rounded top whose radius is $2\frac{1}{2}D$. The length of head H is equal to D, or $\frac{D}{2}$, giving the names *high head* and *low head* respectively. The head is separated from the shank by a neck whose approximate diameter is equal to the diameter of the threads at the root.

The length of this neck is about twice the depth of thread. The under side of the head is generally rounded with a curve whose radius is the same as the top, viz., $2\frac{1}{2}D$. The diameters of set screws begin with $\frac{1}{4}''$, vary by $\frac{1}{16}$ to $\frac{5}{8}''$, then by $\frac{1}{8}''$ to $1''$. The shank is threaded its whole length by U. S. St. threads, the number of threads per inch being given in column 16, Table 1. The length of neck may be taken equal to the difference between columns 18 and 19, in Table 1. In cases where it is objectionable or contrary to law to have the head of a set screw project above the surface of the piece into which it is screwed, it is made without a head, as shown in Fig. 81 on the right. A slot is made for a screw driver in one end to enable it to be turned into place, or it is made as shown in Fig. 82 which shows a hex. hole in the screw in which a key can be inserted. The bolts and screws with their fittings which have been treated thus far are the principal ones used in ordinary machine design. There are many others for special work, many of them being shown and described in the American Machinist's Handbook, by Colvin and Stanley.

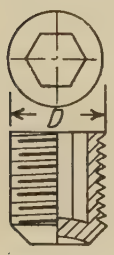

FIG. 82.
Set Screw.

81. As previously stated, in calculations which involve the tensile strength of bolts or screws it is customary to consider the area of the bolt or screw at the root of the thread. In Table 1, Column A, this area is given for each bolt when the thread is U. S. St. If we consider this area to resist tension at the rate of 1000 lbs. per sq.in. of area then column D shows the load in pounds which the bolt will carry. If we allow 2000 lbs. per sq.in. then the bolt will carry a load twice as great as the load of column D. By the same reasoning a strain of n thousand lbs. per sq.in. will permit loading the bolt with n times the load given in column D. Small bolts are more liable to be overstrained by screwing up the nuts too tightly, especially in

cases where joints are kept tight by means of the bolt tension. When calculations of this kind are made, the strain at the root section should be proportioned somewhat as follows:

Large bolts and studs; iron, 6000; steel, 8000 to 10,000.

Bolts $\frac{7}{8}''$ and under, 2500 to 5000; steel, 6000 to 8000.

Bolts on cylinders under 10″ diam., 3000 for iron, 5000 for steel.

Bolts under $\frac{5}{8}''$ diameter are to be avoided in places where they are subjected to much pressure in screwing up.

A workman can easily twist off a $\frac{1}{2}''$ bolt by applying his whole force at the end of an ordinary wrench whose handle has been lengthened by a convenient piece of gas pipe.

The theoretical length of the wrench handle is about 15 times the bolt diameter (d) and the average force exerted by a workman will be 40 lbs. With this leverage and pull, a half inch bolt will be strained to 15,000 lbs. per sq.in. at the root. The strength of a bolt to resist *shear* will be found in column E, Table 1, for a strain of 1000 lbs. per sq.in. For (n) thousand lbs. per sq.in. multiply the tabular value by (n) to find the strength of the bolt

INSTRUCTIONS

Screws and Bolts

Plate 1, No. 1 paper. 2 hours allowed. Av. total time required 2.9 hours.

Fig. 1. Draw side (partly in section) and end view of a tapped hole for a bolt $D = (″)$ with a bolt end in the hole for the max. distance. The material in which the hole is tapped may be sectioned for C. I.

Fig. 2, make side and end views of a (a) head machine screw, $D = (″)$. Grip $= (″)$.

Fig. 3, make side and end views of a (b) head machine screw, $D = (″)$, Grip $= (″)$.

Fig. 4, make side and end views of a (c) head cap screw $D = (″)$ Grip $= (″)$. Show the max. number of faces in the side view.

Fig. 5, make side and end views of a stud bolt with a hex. nut (3 faces showing). $D = (″)$. Grip $= (″)$.

Fig. 6, make side (2 faces) view and end view of a tap bolt. Grip $= (″)$. $D = (″)$. Name of plate to be "Screws, Tap and Stud Bolts."

TABLE GIVING DATA FOR PLATE 1

No.	Fig. 1.	Fig. 2.			Fig. 3.			Fig. 4.			Fig. 5.		Fig. 6.	
	D''	a	D''	Grip$''$	b	D''	Grip$''$	c	D''	Grip$''$	D''	Grip$''$	D''	Grip$''$
1	1	Fillister	$\frac{1}{2}$	1	Button	1	$\frac{3}{4}$	Hex.	$\frac{3}{4}$	$\frac{7}{8}$	$\frac{3}{4}$	1	$\frac{9}{16}$	$\frac{9}{16}$
2	$\frac{7}{8}$	"	$\frac{9}{16}$	$1\frac{1}{8}$	"	$\frac{7}{8}$	1	Sq.	$\frac{1}{2}$	$\frac{1}{2}$	$\frac{5}{8}$	1	$\frac{1}{2}$	$\frac{5}{8}$
3	$\frac{3}{4}$	"	$\frac{5}{8}$	1	"	$\frac{3}{4}$	$\frac{7}{8}$	Hex.	$\frac{7}{8}$	$\frac{3}{4}$	$\frac{9}{16}$	1	$\frac{3}{4}$	$\frac{1}{2}$
4	$\frac{5}{8}$	"	$\frac{3}{4}$	$1\frac{1}{2}$	"	$\frac{5}{8}$	1	Sq.	$\frac{7}{8}$	$\frac{7}{8}$	$\frac{1}{2}$	1	$\frac{7}{8}$	1
5	$1\frac{1}{8}$	"	$\frac{7}{8}$	$1\frac{1}{8}$	"	$\frac{9}{16}$	$\frac{7}{8}$	Hex.	$\frac{3}{4}$	1	$\frac{7}{8}$	$\frac{3}{4}$	$\frac{5}{8}$	$\frac{7}{8}$
6	$1\frac{1}{4}$	"	1	$1\frac{1}{4}$	Flat	$\frac{1}{2}$	$\frac{7}{8}$	Sq.	$\frac{5}{8}$	$1\frac{1}{16}$	$\frac{3}{4}$	$\frac{3}{4}$	$\frac{3}{4}$	$\frac{1}{2}$
7	$\frac{9}{16}$	"	$1\frac{1}{4}$	$\frac{7}{8}$	"	$\frac{9}{16}$	$\frac{3}{4}$	Hex.	$\frac{1}{2}$	$\frac{15}{16}$	1	$\frac{1}{2}$	$\frac{7}{8}$	1
8	1	"	$\frac{7}{16}$	$\frac{15}{16}$	"	$\frac{5}{8}$	$\frac{1}{2}$	Sq.	$\frac{9}{16}$	$\frac{13}{16}$	$\frac{3}{4}$	$\frac{1}{2}$	$\frac{3}{4}$	1
9	$\frac{7}{8}$	"	$\frac{1}{2}$	$1\frac{1}{4}$	"	$\frac{3}{4}$	$\frac{7}{8}$	Hex.	$\frac{5}{8}$	$\frac{11}{16}$	$\frac{5}{8}$	$\frac{3}{4}$	$\frac{5}{8}$	1
10	$\frac{3}{4}$	"	$\frac{5}{8}$	$1\frac{1}{8}$	"	$\frac{7}{8}$	$\frac{3}{4}$	Sq.	$\frac{3}{4}$	$\frac{7}{8}$	$\frac{1}{2}$	$\frac{1}{2}$	$\frac{9}{16}$	1

Plate 2. No. 1 paper. 2 hours allowed. Av. total time required 2.4 hrs.

Fig. 1, draw a side view, front view and two end views of a U. S. St. hex. hd. bolt with hex. nut. $D = (")$. Grip $= (")$. In the front view show two faces of head and three faces of nut. End views each side of the front view.

Fig. 2, draw a front view and two end views of a U. S. St. sq. hd. bolt with sq. nut. $D = (")$. Grip $= (")$.

Show one face of the head and two faces of the nut in the front view. Use spherical finish for both head and nut. Name of plate to be "U. S. St. Bolts and Nuts." Give all dimensions of heads and nuts, length of bolts, etc.

TABLE FOR DATA FOR PL. OF U. S. ST. BOLTS

No.		1	2	3	4	5	6	7	8	9	10
Fig. 1	$D = \frac{3}{4}$	$\frac{1}{2}$	$\frac{5}{8}$	$\frac{7}{8}$	$\frac{9}{16}$	1	$1\frac{1}{8}$	$1\frac{1}{4}$	$\frac{7}{16}$	$\frac{9}{16}$	
	Grip $= 1$	$\frac{3}{4}$	$\frac{7}{8}$	$\frac{3}{4}$	$\frac{11}{16}$	$\frac{9}{16}$	1	$1\frac{1}{8}$	1	1	
Fig. 2	$D = \frac{1}{2}$	1	$1\frac{1}{8}$	$\frac{1}{2}$	1	$\frac{9}{16}$	$\frac{1}{2}$	$\frac{7}{16}$	1	$\frac{7}{8}$	
	Grip $= \frac{3}{4}$	1	1	$\frac{1}{2}$	$\frac{7}{8}$	$\frac{3}{4}$	$\frac{3}{4}$	$\frac{5}{8}$	$\frac{3}{4}$	$\frac{11}{16}$	

Prob. 1. (*a*) Calculate the load a $\frac{3}{4}''$ steel bolt will support in tension when the material is strained to 6000 lbs. per sq.in. (*b*) Same for a $\frac{7}{8}''$ steel bolt.

Prob. 2. How many bolts and of what diam. will you use to sustain a load of 30,000 lbs. in tension?

Plate 3. No. 1 paper. 2 hours allowed. Av. total hours required 2.94.

Fig. 1, draw side and end views of a sq. hd. (*a*) point set screw. $D = (\text{''})$. Length $= (\text{''})$. Show two faces of head.

Fig. 2, draw two views, front and either top or side of a lifting eye bolt whose shank diameter $A = (\text{''})$.

Fig. 3, draw the top and side view of a Penn nut for a bolt whose diam. $d = (\text{''})$. Show the nut as it appears on a bolt passing through a machine part with the set screw in position. Put a split pin through the bolt end.

Fig. 4, draw the front and top view of a cottered bolt with a hex. nut. The material through which the bolt passes as well as washer and cotter are to be shown in this view. $D = (\text{''})$. Grip to be assumed. Make a side view of the cottered end.

ASSIGNMENT TABLE FOR PLATE 3

No.	Fig. 1.			Fig. 2.	Fig. 3.	Fig. 4.
	a	*D*	Length.	*A*	*d*	*D*
1	oval	$\frac{9}{16}$	1	$\frac{3}{8}$	$\frac{3}{4}$	$\frac{7}{8}$
2	cup	$\frac{9}{16}$	$\frac{7}{8}$	$\frac{1}{2}$	$1\frac{1}{8}$	1
3	oval	$\frac{5}{8}$	1	$\frac{5}{8}$	$\frac{7}{8}$	$1\frac{1}{8}$
4	cup	$\frac{5}{8}$	$\frac{3}{4}$	$\frac{3}{4}$	$1\frac{1}{4}$	$\frac{5}{8}$
5	oval	$\frac{3}{4}$	1	$\frac{7}{8}$	$1\frac{1}{2}$	$1\frac{1}{8}$
6	cup	$\frac{7}{8}$	1	1	1	$\frac{3}{4}$

CHAPTER VI

KEYS, COTTERS, ETC.

82. When two machine parts are to be fixed in such a manner that one part cannot rotate around the other, they are generally *keyed* together. Examples of this are found in wheels placed on shafts and keyed to them, rocker arms or levers used to turn shafts, cranks of engines, hand wheels on valve stems, etc.

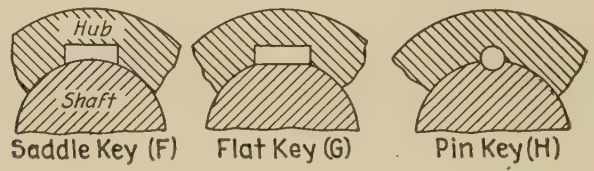

Fig. 83.

There are many ways of keying and the draughtsman must choose the style best adapted to the case in hand. A **Saddle** key is used for light work and acts by friction on the shaft. A **Flat** key rests on a flattened surface on the shaft and is made with a slight taper on the top in the direction of its length and driven into the groove in the hub from the end of the groove. The **Pin** key is a tapered pin driven into a tapered hole drilled half in the shaft and half in the hub. These are shown in Fig. 83 by sections perpendicular to the axes of the shaft.

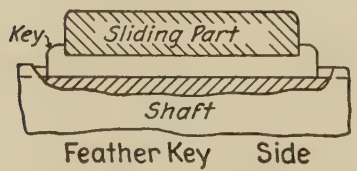

Fig. 84.

The **Feather** key is made with two gib heads fitted on both sides of the hub, the object being to allow the wheel to slide along a shaft and still turn with it. The side view of this key is shown in Fig. 84. The sides of the key are parallel, also the top and bottom.

83. Sunk keys are let half into the shaft and half into the hub which is to be keyed. The sides of such keys are always parallel while the top is on a slope with the bottom. The sides of these keys fit tightly against the sides of the grooves in the shaft and hub, but the tops may or may not fit. The bottoms fit if the key is placed in the shaft and the hub driven on. A sunk key is shown in Fig. 85 (end and side views) together with

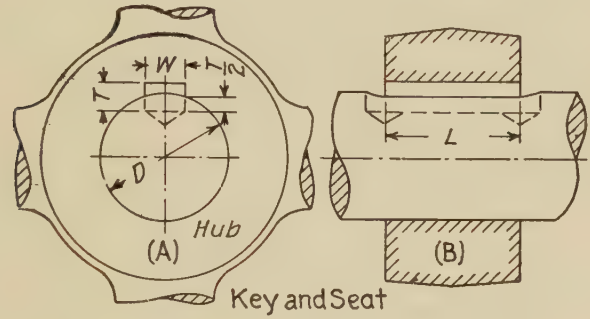

Fig. 85.

the shaft and hub which it keys. The key has a length L, width W and thickness T. Good proportions for W and T are given by the following formulæ:

$$W = \tfrac{3}{16}D + \tfrac{1}{8}'', \quad T = \tfrac{3}{32}D + \tfrac{1}{8}'', \quad D = \text{the diameter of shaft.}$$

When a sunk key is tapered it is usually provided with a gib head to facilitate its withdrawal from the shaft. The dimensions of this head are shown in Fig. 86. W and T are the same as above.

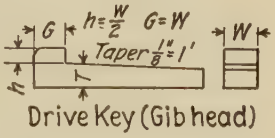

Fig. 86.

84. The grooves in the shaft and hub are called key slots or key ways, and the two methods of cutting them in the shaft are shown in Fig. 85 and Fig. 87. In Fig. 85 two holes are drilled in the shaft W'' diameter and L'' apart. The metal between these holes is then cut out, leaving a slot or keyway of width (W) and depth $\frac{T}{2}$ with semicircular ends. The key may

have semicircular ends to fit the keyway or be cut square with a length equal to L only. If the key seat is cut with a milling cutter it appears as shown in Fig. 87 (D) side view. The cutter

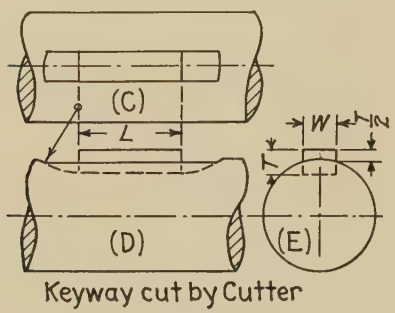

Fig. 87.

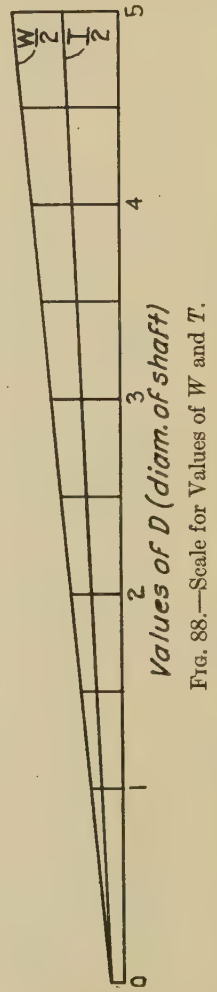

Fig. 88.—Scale for Values of W and T.

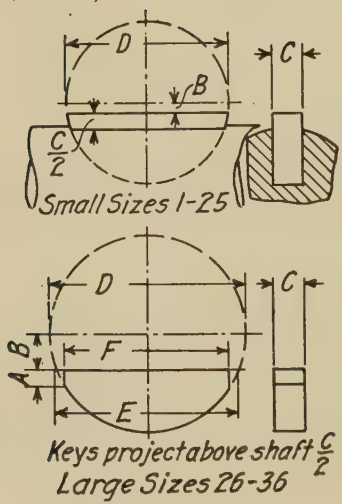

Fig. 89.—Woodruff Keys.

has a thickness equal to (W) and cuts a keyway $\frac{T''}{2}$ deep whose length is (L). This keyway has a curved bottom surface at the ends, the radius of the curve being equal to the radius of the cutter, say from $1\frac{1}{2}''$ to $3''$. In Fig. 87 (C) is a top view

of the shaft showing the key in the keyway. Fig. 88 is a scale for finding values for T and W for different diameters of shafts. The letters correspond to those in Figs. 85, 86, 87.

85. Woodruff Keys are used for light work and are very easy to fit. The key consists of part of a disk as shown in Fig. 89. The key seat in the shaft is made by sinking a milling cutter into the shaft. The diameter of the cutter is D. The key projects above the shaft one-half its thickness. If the hub to be keyed is long, then two or more keys are used. The keyway in the hub is made in the ordinary way of width C and depth $\frac{C}{2}$. The dimensions for different sizes of keys are given in Table 15, page 18.

For light work it is often convenient to use *taper pins* instead of keys. The holes for such pins, after drilling through shaft and nut, are reamed to the taper of the pin and the pin driven in until the small end comes through the hub. The pin can be easily removed by striking on this end and driving it out.

86. When two rods are to be connected rigidly in such a way as to transmit force in the direction of their length only, the most convenient joint for the purpose is the *cottered joint.* The cotter is a flat bar, wedge shaped, and driven into a slot in such a way as to firmly hold the parts against either tension or compression. The end of one rod is enlarged to form a socket into which the end of the other rod fits. Both of these rod ends are provided with slots which are in line when one rod end is fitted into the socket of the other. The cotter is then driven through these slots, making the complete joint as shown in Fig. 90. It can be shown that when the joint is in tension its parts will be of the same strength when the proportions are as follows:

$$D_1 = 1.21D, \quad D = .82D_1, \quad D_2 = 1.75D, \quad B = 1.31D, \quad t = \frac{D_2}{4},$$

$$m = N = \text{from } \tfrac{3}{4}D \text{ to } D, \quad D_3 = 2.42D, \quad D_4 = 1.4D, \quad t_2 = .42D.$$

There must be clearance in a cottered joint if the cotter is to draw the rod end of E tightly into the socket F. This clearance is provided at (cl) in the rod end and at l in the socket. The cotter is driven home in this kind of a joint and the clearance

varies from $\frac{1}{16}''$ to $\frac{1}{8}''$. The total taper of the cotter must not exceed 9°, to prevent the cotter from slipping back when the surfaces in contact are greasy. This corresponds to a taper of 1 in 7. In order to be on the safe side, the taper is made less than this, viz., from $\frac{1}{4}''$ per foot to $\frac{1}{2}''$ per foot. If there

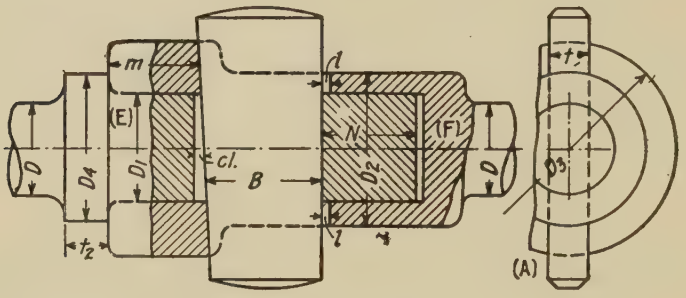

Fig. 90.—Cottered Joint.

is some arrangement for keeping the cotter from loosening, this taper may be increased to 1 in 7. Cotters are used to fasten uprights to bed plates, pistons to piston rods, piston rods to cross-heads, connecting rod stubs to straps, for foundation bolts with C. I. washers, etc.

87. If a cotter AD was driven so as to draw the straps CB onto the connecting rod F, Fig. 91, the friction of the cotter

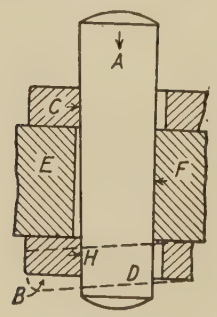

Fig. 91.

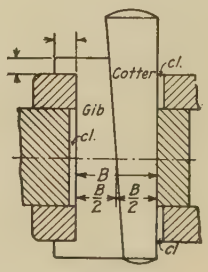

Fig. 92.

against the strap at H would cause it to take the position shown by dotted lines at B. To prevent this a gib is used as in Fig. 92. In this case the taper is on cotter and gib, and the holes

in the parts held together, have parallel sides. Two gibs are sometimes used, the taper being equally divided between them or on one only. The distance B is the same as for cotter alone as given in Fig. 90.

INSTRUCTIONS

Keys and Cotters

Plate 1. No. 1 paper. 2 hours allowed. Av. total hours required 3.13.

Fig. 1, draw the end, top and front views of a shaft. $D = (\ )''$ containing a sunk key. All three views must show the key in position in the keyway. Keyway to be *placed* as shown in Fig. 87 but *made* as shown in Fig. 85. Use letters for dimensions of key except for L which $= (\ )''$.

Fig. 2, draw 2 views of a section of shaft $1\frac{1}{2}''$ diam. and show a Woodruff key No. ( ) as it would appear in this shaft.

Fig. 3, make 3 views of a cottered joint as shown in Fig. 90 when the value of $D = (\ )''$. Name of plate is "Keys and Cotters."

TABLE FOR PLATE ON KEYS AND COTTERS

No.	Fig. 1. D	Fig. 1. L	Fig. 2. Woodruff Number.	Fig. 3. D	No.	Fig. 1. D	Fig. 1. L	Fig. 2. Woodruff Number.	Fig. 3. D
1	$1\frac{1}{2}$	2	10	$1\frac{1}{4}$	7	$1\frac{9}{16}$	$1\frac{1}{2}$	21	1
2	$1\frac{3}{4}$	2	11	$1\frac{1}{2}$	8	$1\frac{7}{16}$	$1\frac{3}{4}$	E	$1\frac{1}{2}$
3	2	2	12	$1\frac{5}{8}$	9	$1\frac{11}{16}$	2	25	$1\frac{1}{4}$
4	$2\frac{1}{4}$	$1\frac{1}{2}$	13	$1\frac{3}{4}$	10	$1\frac{15}{16}$	$1\frac{1}{2}$	26	$1\frac{1}{8}$
5	$2\frac{1}{2}$	2	15	$1\frac{1}{8}$	11	$2\frac{1}{16}$	$1\frac{3}{4}$	31	$1\frac{1}{16}$
6	3	2	19	$1\frac{3}{8}$	12	$2\frac{3}{16}$	2	32	$\frac{15}{16}$

CHAPTER VII

SHAFTING AND SHAFT COUPLINGS

88. A BAR arranged to rotate about its axis and transmit power is called a **shaft.** The cross-section of this bar perpendicular to the axis of rotation is in practice either a square or a circle, although at the points of support it is *always* a circle.

When a shaft is too long to be made in one length two or more lengths are used, joined together by **couplings.**

The diameter of a shaft depends on the power it transmits, the load on it, the distance apart of the bearings which support it, as well as the kind of material of which it is made.

Shafts are accordingly divided into two classes: (*a*) Those which transmit a uniform torque and are not subjected to bending, and (*b*) those which transmit torque and are subjected at the same time to bending due the weight of the rotating parts to which it transmits or from which it receives power. Case (*a*) is the only one which we will consider here, as it is much more common than case (*b*) besides being less difficult of calculation without a knowledge of mechanics.

89. If a force F acts at the end of and perpendicular to a lever (as in Fig. 93, (*a*)), whose length is R, or at the rim of a

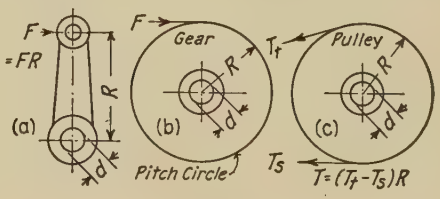

FIG. 93.

gear whose radius is R, the product FR is called the twisting moment or torque acting to twist the shaft d, that is $T=FR$. Let T = the torque, d = diameter of shaft in inches, f_s = maximum

shear stress in the shaft. N = R.P.M. of shaft. H = horse-power transmitted by the shaft. Z = modulus of the section of shaft.

$$Z = \frac{\pi d^3}{16} \text{ for a circular section.}$$

Then

$$T = Zf_s = \frac{\pi d^3}{16} f_s = \frac{d^3 f_s}{5.1}, \quad \ldots\ldots (1)$$

or

$$d = \sqrt[3]{\frac{5.1T}{f_s}}, \quad \ldots\ldots (2)$$

also

$$f_s = \frac{5.1T}{d^3}. \quad \ldots\ldots (3)$$

The value of f_s varies from 6000 lbs. for wrought iron shafts, to 13,500 for steel shafts. The horse-power transmitted is equal to $H = \frac{F \times V}{33000}$, but $V = 2\pi RN$, where R is the radius in feet to the point of application of F. But $T = FR$ where R is in inches, and $H = \frac{F \times 2\pi RN}{12 \times 33000}$ (if R is taken in inches) from which $H = \frac{FRN}{63000}$. Substituting for FR its value T we have, $\frac{H \times 63000}{N} = T$, and substituting again in (2) this value of T gives us

$$d = \sqrt[3]{\frac{5.1H \times 63000}{N \times f_s}}.$$

If $f_s = 9000$,

then $$d = 3.3\sqrt[3]{\frac{H}{N}}, \quad \ldots\ldots (4)$$

If $f_s = 13500$,

then $$d = 2.87\sqrt[3]{\frac{H}{N}}. \quad \ldots\ldots (5)$$

We thus have the means of determining the diameter of a shaft to transmit a given horse-power at a given number of R.P.M. or the converse. Shaft diameters vary by sixteenths of an inch and are $\frac{1}{16}''$ less than the nominal size; that is, a 2″ shaft is $1\frac{15}{16}''$ in diameter.

90. There are several kinds of shaft couplings in use, divided into two classes, (*a*) fast or permanent, comprising *muff* and *flange* couplings, and, (*b*) disengaging couplings of the *claw* coupling type.

Flange Couplings consists of two cast iron flanges or disks keyed to the ends of the shafts and held together by bolts.

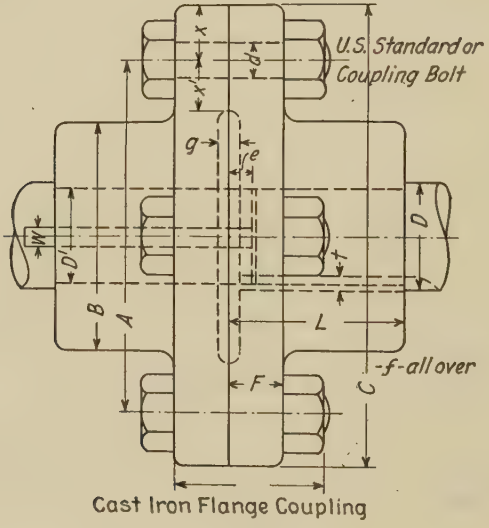

Fig. 94.

The whole power of the shaft is transmitted through these bolts which are in shear.

Fig. 94 shows a flange coupling whose bolt heads and nuts are not protected. Each flange is turned true with its own shaft after being keyed on. The faces of the flanges are then brought together, the alignment of the shafts being insured by allowing one shaft to pass through its own flange and enter the shaft hole of the other flange about $\frac{3}{8}''$. The two shafts in this case must be of the same diameter. The ends of the shafts which enter the flanges are often turned down to a smaller

diameter to provide a shoulder for the flange to fit against. The keys are driven in from the face of the flange, before the flanges are trued and brought together. The bolts are carefully fitted to the holes in the flanges as they are in shear. The dotted lines near the joint of the flanges represent recesses in each flange face which do not have to be machined as the flanges only come in contact beyond them. Otherwise the surfaces of the flanges are finished in the lathe. The fillet joining the flange to its hub is made with as large a radius as possible but not so large as to bring the curve under the hex. nut and prevent it from turning freely on a flat surface. The outer edges of flange and hub are rounded off to prevent the sharp edges from injuring the workmen.

The radius of fillets varies from $\frac{1}{4}''$ to $\frac{1}{2}''$. As a rule rounded external edges are for safety and looks while internal angles are filleted for strength. The number of bolts used depends on the diameter of shaft but not in a direct ratio, as the number is usually not less than three and increases by even numbers from four upwards. There is no real reason why odd numbers of bolts cannot be used, but they are not as a rule.

If N equals the number of bolts, then N may vary from $\frac{2}{3}D+2$, to $D+2$, where D is the shaft diameter (nominal).

91. Since the bolt diameter influences the diameter of the outside of the flange it is better to have more bolts of smaller diameter than fewer of large diameter.

If d = bolt diameter then we may take $d=\frac{0.423D}{\sqrt{N}}+.3''$, using the nearest U.S.St. diameter above the value of d obtained. As the bolts take the strain of transmission through the coupling we may determine the shear in them by the following:

$$\frac{\pi d^2}{4}\times f\times N\times\frac{A}{2}=\frac{D^3\pi}{16}\times f_s.$$

$$f=\frac{D^3\pi f_s\times 4\times 2}{16\times\pi d^2\times A\times N}, \qquad f=\frac{D^3 f_s}{2d^2AN},$$

Where f = shear in the bolts and $\frac{A}{2}$ = radius of bolt circle given below. f_s = shearing strain allowed in the shaft.

Low and Bevis give the following values for the lettered dimensions of Fig. 94.

$x^1 = x = \frac{C-A}{2}$, $\qquad d = \frac{0.423D}{\sqrt{N}} + .3''$,

D = diameter of shaft, $\qquad e$ = varies from $\frac{1}{4}''$ to $\frac{1}{2}''$,

$B = 1.8D + 0.8''$, $\qquad F = 0.35D + .35''$,

$A = B + 3.2d$, $\qquad L = 1.2D + 0.8''$,

$C = B + 6d$, $\qquad g = \frac{1}{4}''$ to $\frac{1}{2}''$.

t and w are standard key dimensions given by the scale in Chapter VI.

All calculations to be reduced to nearest sixteenth of an inch.

92. The principal objection to flange couplings like the one shown in Fig. 94 is the liability of an accident from the projecting bolt heads or nuts. The objection is overcome by making an external flange deep enough to guard the heads and nuts. A coupling of this type is called a pulley coupling and is shown in Fig. 95. The flanges are keyed to their respective shaft ends and bolted together. The principal dimensions taken from D. A. Low's Mechanical Engineer's Pocket book are given below:

$B = 1.8D + 0.8''$ $\qquad d = \frac{0.425D}{\sqrt{N}} + 0.3''$,

$L = 1.2D + 0.8''$, $\qquad D$ = diameter of shaft.

$H = 0.5D + 1''$ but not less than $0.3D + 1.3d + 0.3''$,

$h = 0.3D + 0.3''$,

$i = 0.1D + 0.2''$, $\qquad n = 1.5d$,

$f = \frac{H+3}{100}$, $\qquad e = \frac{1}{4}''$, to $\frac{1}{2}''$,

N = from $\frac{2}{3}D + 2$, to $D + 2$; but not less than 3, and usually the nearest even number,

W = key width and t = key thickness from chapter on keys. (Use diagram.)

Sizes must be taken to the nearest sixteenth except in taking the value of d, which must be the nearest standard diameter given in Table 1.

93. Flexible Couplings are used to connect shafts which are slightly out of line or when one shaft is rigidly held from end play and the other is free to move a short distance.

A Universal Joint Coupling is used to connect two shafts when their axes are intersecting and inclined to each other. It is used on milling machines, automobile propeller shafts, etc.

The coupling is called a Hooke's joint or Cardan joint and is of the form shown in Fig. 96. The forked ends are often

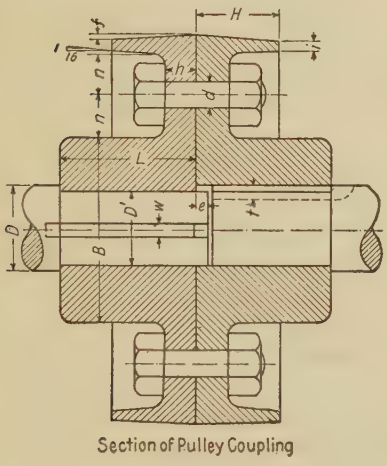

Fig. 95.

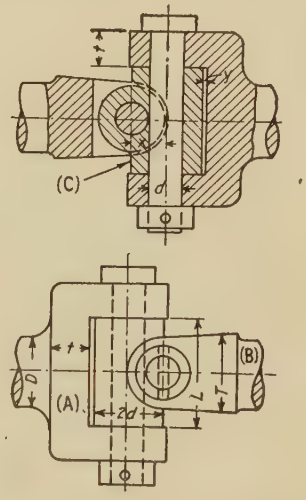

Fig. 96.—Hooke's Joint.

forged on the shafts to be connected. The dimensions are determined from the following formulæ, taken from Spooner's Machine Construction and Drawing:

$d=\frac{D}{2}$, $\qquad Y=0.05d$,

$L=1\frac{1}{2}D$, $\qquad T=1.2D$,

$t=\frac{D}{2}$, $\qquad D=$ diam. of shaft.

$X=d+\frac{1}{16}$,

A *double* joint of this type will preserve a constant velocity ratio between the shafts connected, but a single joint will not.

94. *Claw* couplings are used for connecting or disconnecting shafts when the change is to be made often. The usual form of this coupling consists of two flanges; one flange keyed to one shaft and the other flange free to slide on the other shaft but made to rotate with it by a feather key.

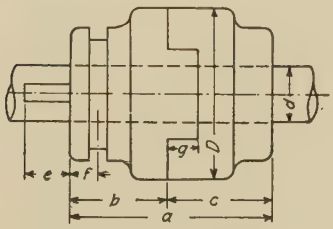

FIG. 97.—Claw Coupling.

The faces of these flanges are provided with teeth which engage when driving. Fig. 97 shows the component parts of such a coupling when transmitting power. To disengage the coupling the left hand flange A is moved to the left a distance greater than g.

The claws of one flange fit loosely in the recesses of the other to allow their engagement more easily. The groove in A is made to receive a forked lever for sliding A along the shaft. The dimensions given by Unwin are as follows:

$D=2.6d+\ .5''$ $\qquad$ $e=0.4d\ +0.85''$

$b=1.2d+1.45''$ $\qquad$ $f=0.16d+0.375''$

$c=1.4d+1.6''$ $\qquad$ $g=0.4d\ +0.5''$

INSTRUCTIONS

Couplings

Plate 1, No. 3 paper, 2 hours allowed. Av. total hours required, 3.55.

Make a front view (lower half in section) and end view of a flange coupling (*a*) type for a shaft whose diam. $D=(\ \ '')$. If D is greater than $3\frac{1}{8}''$ use half size scale. The front view is to be half in section below the center line, the section plane passing through the axis of the shaft. The only material which this plane cuts, and necessary to be shown in section, is that of the cast iron flanges. The bolts, nuts, keys and shaft are *not* to be section lined. Begin spacing the bolts on a *vertical* diameter in the end view. Place the key in one of the flanges 90° from that in the other and have the *side* view of one key appear in the half section view. Use (*b*) bolts and make a bill of material on the drawing.

Use common fractions in dimensioning this plate, not decimals.

Be sure and give the following dimensions:

Length of shaft of D_1 diam., outside diam. of pulley coupling, diam. at edge of face, inside of rim, diam. of bolt circle, length of *each* key, length of bolt, radii of fillets, depth of recess for bolt heads and nuts.

List each key in bill of material, also give diam., length, grip and kind of bolts used.

Mark the parts on the drawing with the mark given in the bill of material.

Take $D_1 = D - \frac{1}{16}''$ for $1\frac{1}{2}''$ shaft.

Take $D_1 = D - \frac{3}{32}''$ for $2''$ to $3''$ shaft.

Take $D_1 = D - \frac{1}{8}''$ for $3''$ to $4''$ shaft.

Take $D_1 = D - \frac{5}{32}''$ for $4''$ to $5''$ shaft.

Use 3 bolts on $1\frac{1}{2}''$ coupling.

Use 4 bolts up to $3\frac{3}{4}''$ coupling.

Use 6 bolts above $3\frac{3}{4}''$ coupling.

Use a standard diam. of bolt.

Set the keys on a shaft D_1 diam. end view first.

TABLE FOR COUPLING SIZES

No.	1	2	3	4	5	6	7	8	9	10	11	12	13
D	$1\frac{1}{2}$	$1\frac{3}{4}$	2	$2\frac{1}{4}$	$2\frac{1}{2}$	$2\frac{3}{4}$	3	$3\frac{1}{4}$	$3\frac{1}{2}$	$3\frac{3}{4}$	4	$4\frac{1}{4}$	$4\frac{1}{2}$
a	non-protected for all except those with an *e* after the assignment No., who will take Fig. 95 instead of Fig. 94.												
b	U. S. St. bolts for those without an (*f*) after the assignment No. Those with an (*f*) after the No. will use coupling bolts.												

Prob. 1. Calculate the value of f for the bolts of your coupling when the value of f_s for the shaft is 7500 lbs. per sq.in.

Prob. 2. Make 3 views of a Hookes joint for a $1\frac{1}{2}''$ diam. shaft. Dimension carefully. Av. time required 3.25 hours.

Prob. 3. Make 2 views of a claw coupling for a $2''$ shaft.

CHAPTER VIII

STUFFING BOXES

95. WHENEVER a reciprocating or rotating rod or spindle passes through the wall of a vessel containing a fluid or gas it becomes necessary to use a *stuffing box* to prevent leakage along the rod.

Examples of this may be seen on steam engines and steam pumps where the piston rods pass through the ends of cylinders containing steam or water. The valve stem of a globe valve or angle valve used for controlling the flow of steam or water is another case where a stuffing box is necessary to prevent leakage. The propeller shaft of a vessel passes through a stuffing box as it issues from the vessel.

96. Fig. 98 represents a stuffing box of the simplest kind. (A) is the case formed on the wall through which the rod D passes, and contains the *packing* (B). This packing is generally some soft material such as hemp rope, canvas covered wicking or specially prepared material well greased to allow the rod to move freely with as little friction as possible. The packing is forced inwards by means of a loose metal sleeve called a *gland*, which is pressed down by turning the nuts on the stud bolts. These studs screw tightly into the lugs on the casing and project through lugs on the gland. The bottom of the packing space as well as the bottom of the gland is beveled in such a way as to press the packing against the rod when the gland is forced down on it.

The width of the annular packing space S depends on the diameter of the rod D but does not vary directly as D.

Professor Charles B. Richards originated the following formula which gives suitable values of S for rods varying in diameter from $\frac{1}{8}''$ to $24''$.

$$S = (0.8\sqrt[3]{D + \tfrac{1}{8}''}) - \tfrac{3}{8}''.$$

Between certain limits however this formula can be replaced by straight line formulæ which are easier of solution, as

$S = \frac{5}{16}D + \frac{1}{8}''$ for rods from $\frac{1}{4}''$ to $1''$ diameter,
$S = \frac{3}{16}D + \frac{1}{4}''$ " " $1''$ to $2''$ "
$S = \frac{1}{8}D + \frac{3}{8}''$ " " $2''$ to $4''$ "
$S = \frac{3}{32}D + \frac{1}{2}''$ " " $4''$ to $8''$ "

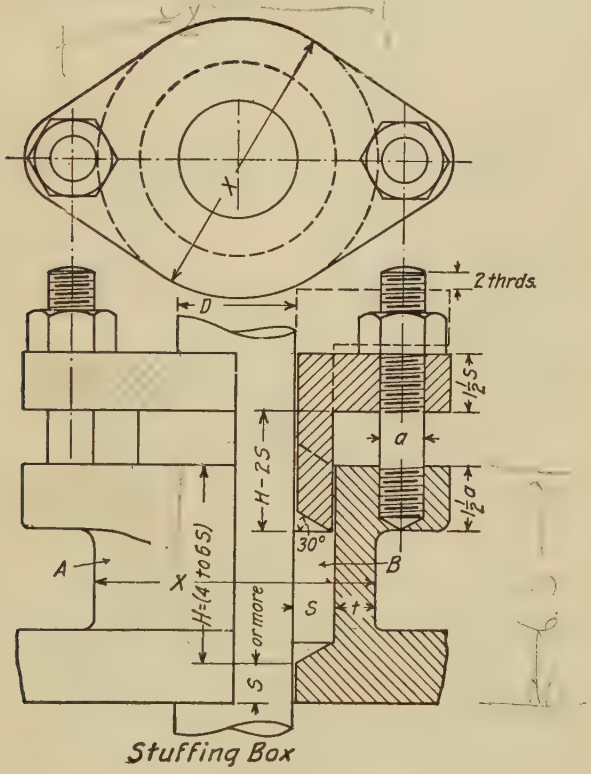

FIG. 98.

Use the nearest thirty-second of an inch to the calculated value. The scale shown in Fig. 99 is much easier to use, however, and saves all calculation. The depth of packing space (H) varies from $4S$ to $6S$, according to conditions of speed of rod, pressure tending to cause leakage, and convenience in repacking. The largest value is used when the leakage is apt to be the worst and the wear on packing the greatest as well as the length

of time the box must last without repacking. The length of gland exclusive of flanges should always be $2S$ less than the length of packing space (H). This prevents the packing from being compressed in the box to more than $\frac{1}{3}$ its original volume. There is no fixed rule for the diameter (a) of the stud bolts but since the pressure they must stand depends on the size of packing and length of packing space it seems reasonable to use some such ratio as the following:

Use the largest constant for the smallest box.

When D varies from $\frac{1}{4}''$ to $1''$, $a = 1.2S$ to $1.1S$,
When D varies from $1''$ to $2''$, $a = 1.1S$ to S.
When D varies from $2''$ to $4''$, $a = S$ to $.9S$,
When D varies from $4''$ to $8''$, $a = .9S$ to $.8S$.

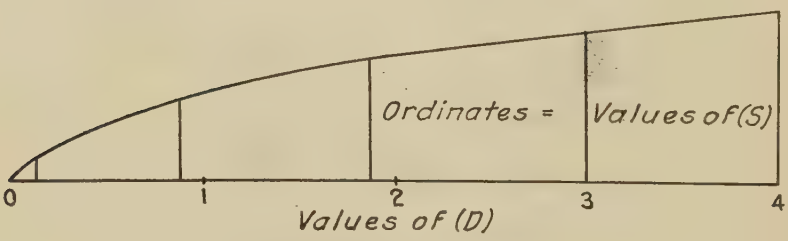

Fig. 99.

The thickness (t) of the casing wall may be made equal to S in nearly all cases, without danger of rupture, especially on small boxes. On large boxes this gives too small values of (t) and it can then be increased to $t = .04D + \frac{5}{8}''$. In Fig. 98 only two stud bolts are used for forcing in the gland, but on large shafts the gland is so large that three or more are used. In that case the bolt lugs on both gland and casing become cylindrical flanges instead of two lugs on opposite sides. The thickness of the lug on the gland is $1\frac{1}{2}S$, while the lug on the casing varies from $1\frac{1}{4}a$ to $1\frac{1}{2}a$. The distance between the centers of the studs may be taken as $D + 4S + a$, which will bring the inside of the bolt tangent to the outside of the casing surrounding the packing space. The top views of the lugs of the gland and casing is the same, the outside of the lug coming a sixteenth of an inch beyond the corner of the nut. The studs should be long enough to project two threads above the upper surface of the gland

lug when the gland is just entering the packing space. The minimum thickness of material at the bottom of the packing space should *not be less* than S but can be made greater if necessary.

97. A stuffing box of the type shown in Fig. 98 occupies considerable space on account of the flanges on the gland. In many cases it is desirable to reduce this space, and for this reason the stuffing box shown in Fig. 100 is often used.

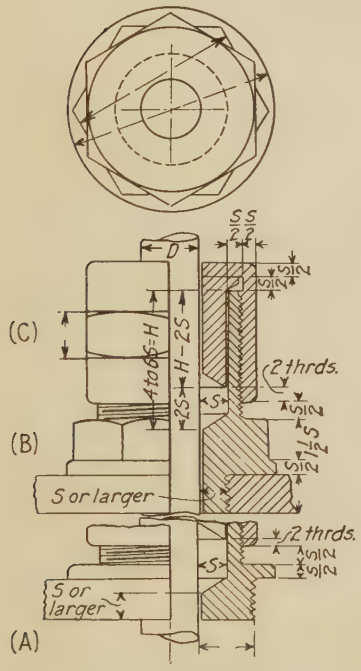

Fig. 100.—Screw Cap Stuffing Box.

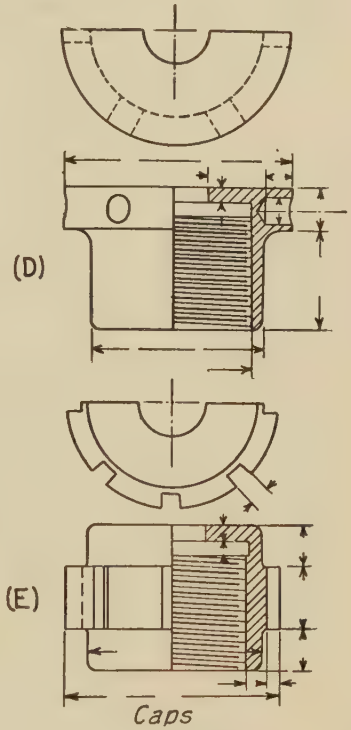

Fig. 101.

It consists of *three* parts: the cap, the gland, and the casing. The casing may or may not be part of the wall of the vessel.

The gland has a slight enlargement at the top to prevent it from entering the packing space too far. This enlargement is beveled on the under side to facilitate removal. The gland is pressed against the packing by a *cap* which screws over the end of the casing. This cap is formed on its exterior to fit the

jaws of a wrench or the pin of a spanner. In the first case part of the cap is made hexagonal, as at (*C*). In the second case the cap has holes in the circumference as shown in Fig. 101 (*D*) or slots as shown at (*E*). The hexagon of Fig. 100 may be placed at the outer end of the cap or near the center and varies in length from $\frac{1}{2}$ the cap length on short caps to $\frac{1}{3}$ the length on long ones. The holes in Fig. 101 (*D*) vary from $\frac{3}{16}$ to $\frac{1}{2}''$ in diameter and about the same in depth.

The slots of Fig. 101 (*E*) are about $\frac{1}{4}''$ wide by $\frac{1}{4}''$ deep.

The hexagon on the cap is circumscribed about the cylindrical part. The length and width of packing space and gland is the same as for boxes with flanged glands. The threads on casing and cap are of fine pitch, varying from 16 per inch on small boxes to 6 per inch on large ones. Even numbers of threads per inch are used as: 14, 12, 10, 8.

98. A casing which screws into a cylinder wall may or may not be provided with a hexagonal portion, for convenience in removing it or putting it in place. In the first case it is formed as in Fig. 100 (*B*) with a flange below a hexagon which has the same distance across flats as the hexagon on the cap.

In the second case shown as (*A*) Fig. 100 there is a flange only, the placing in position being accomplished by a pipe wrench used on the flange.

Sometimes there are holes in the inside end of the casing below the packing space to take a spanner.

The dimensions of these screw cap stuffing boxes are given in the drawings of Fig. 100. Aside from the holes and slots the caps of Fig. 101 have the same dimensions as the cap of Fig. 100.

INSTRUCTIONS

Stuffing Boxes

Plate 1, No. 2 paper. 2 hours allowed. Av. total hours required, 2.88.

Draw a stuffing box for a rod whose diam. $D = (\quad'')$. Box to be of the type requiring bolts to press the gland against the packing. Make 3 views, front and side views half in section, top view complete outside. Use letters for dimensions where they are given but numerals elsewhere. Give formulæ for letters used arranged in tabular form. Name of plate is "Bolted Gland Stuffing Box."

Plate 2, No. 1 paper. 2 hours allowed. Av. total hours required, 3.0.

Draw in detail the parts of a screw cap stuffing box for a rod $D = (\quad'')$ diam. Use the style of cap marked ( ). Completely dimension each part, using numerals entirely. Use the style of casing shown at ( ). Name of plate, "Details of Screw Cap Stuffing Box for (″) Rod."

TABLE FOR STUFFING-BOX PLATES

No.		1	2	3	4	5	6	7	8	9	10
Pl. 1, D.....		2	$2\frac{1}{8}$	$2\frac{1}{4}$	$2\frac{3}{8}$	$2\frac{1}{2}$	1	$1\frac{1}{8}$	$1\frac{1}{4}$	$1\frac{3}{8}$	$1\frac{1}{2}$
	D	1	$\frac{7}{8}$	$\frac{3}{4}$	$\frac{5}{8}$	$\frac{9}{16}$	$1\frac{1}{8}$	$\frac{5}{8}$	$\frac{3}{4}$	$\frac{7}{8}$	$\frac{15}{16}$
Pl. 1,	Cap...	*C*	*E*	*C*	*D*	*C*	*D*	*C*	*E*	*D*	*E*
	Casing	*A*	*A*	*B*	*A*	*B*	*A*	*B*	*B*	*B*	*A*

No.		11	12	13	14	15	16	17	18	19	20
Pl. 1, D.....		$1\frac{5}{8}$	$1\frac{3}{4}$	$1\frac{7}{8}$	2	$2\frac{1}{16}$	$2\frac{3}{16}$	$2\frac{5}{16}$	$1\frac{3}{16}$	$1\frac{5}{16}$	$1\frac{7}{16}$
	D	$\frac{13}{16}$	$\frac{11}{16}$	$1\frac{1}{16}$	1	$1\frac{3}{16}$	$1\frac{5}{16}$	$1\frac{1}{4}$	$1\frac{3}{8}$	$1\frac{1}{16}$	$\frac{7}{8}$
Pl. 2	Cap...	*C*	*D*	*C*	*D*	*E*	*C*	*D*	*E*	*E*	*C*
	Casing	*A*	*B*	*A*	*A*	*B*	*A*	*B*	*A*	*B*	*B*

On Pl. 2 make two views of each part. Do not section the gland. Indicate number of threads per inch on cap and casing. Use conventional system of threading wherever possible. In giving dimensions pay special attention to *diameters*. Give *all* the dimensions on each part, place the name and mark of each part below it. Make a bill of material. (see Art. 17.)

Test No. 3. Arts. 70–98

1. Draw 3 views of a U. S. St. Sq. nut for a 1″ diam. bolt. (8 threads.) Give all dimensions.

2. What is a cottered joint? A screw cap stuffing box? A split cotter pin? A drive key (gib head)?

3. Draw end, top, and side views of a 2″ shaft in which a keyway has been cut to make a sunk key $\frac{1}{2}'' \times \frac{5}{16}'' \times 2''$ long. Give the dimensions of the keyway.

4. Make a sketch drawing of the *gland* for a "bolted gland" stuffing box indicating by dimension lines and arrows all the dimensions necessary for making the gland. Choose your own views.

Test No. 4. Arts. 70–98

1. Draw 3 views of a U. S. St. Hex. Nut for a 1″ diam. bolt (conventional method) and give dimensions. (8 threads.)

2. What is a Penn nut? A cottered bolt? A Woodruff key? A set screw.

3. Draw end, top and side views of a shaft 2″ diam. showing the *keyway* for a sunk key whose dimensions are $\frac{1}{2}'' \times \frac{5}{16}'' \times 2''$ long. Give dimensions for the keyway only.

4. Make a sketch drawing of *one* of the flanges of a shaft coupling indicating what dimensions you would give and where, for making the flange. Choose your own views.

CHAPTER IX

BEARINGS, JOURNALS, ETC.

99. The parts of a rotating shaft which touch the supports of the shaft are called *journals*. The supports are called *bearings*. The simplest form of a bearing is a cylindrical hole in the frame of a machine as shown at (*A*) Fig. 102. This cannot be renewed without renewing the whole bearing. At (*B*) Fig. 102,

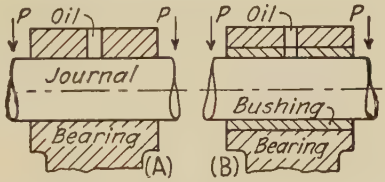

Fig. 102.

is shown a *bushing* which can be renewed when worn. The load on the shaft is acting in the direction of the arrows *P*. If *P* acts in a line parallel to the axis of rotation, as at (*A*) or (*B*), Fig. 103, the bearing is called a *collar* or *thrust* bearing. The pressure is then resisted by one or more collars.

If the pressure acts as shown in Fig. 103 (*C*) the pressure is taken on the end of the shaft and the bearing is called a *footstep* or *pivot* bearing.

100. The *effective area* of a bearing is the area of the bearing when projected on a plane perpendicular to the direction of the load. In Fig. 102 it is $L \times D$. In Fig. 103 (*A* and *B*) it is

$$\left(\frac{\pi D_1^2}{4} - \frac{\pi D^2}{4}\right) N = \frac{\pi}{4}(D_1^2 - D^2)N,$$

where N equals the number of collars.

In Fig. 103 (*C*) the projection is a circle of diameter D whose area is

$$\frac{\pi D^2}{4}.$$

The load supported by a bearing is the product of the working pressure per square inch and the projected area of the bearing in square inches. If we call p the pressure per square inch, A the projected area of bearing and W the total load on the bearing, then $W = pA$. A is given above for each of the three cases preceding.

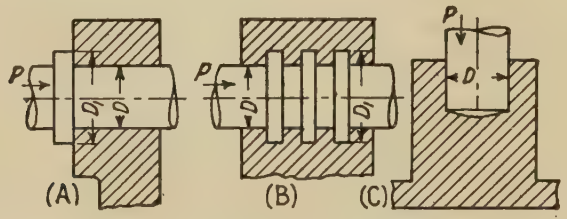

Fig. 103.

101. Bearings for horizontal shafts supporting vertical loads are made with two or more parts to facilitate the introduction of the shaft as well as to allow for adjustment in case of wear.

One of the simplest of these divided bearings is that found on the frame of a machine and called a *frame bearing* or *bearing box*. Fig. 104. The cap is removable and is held in place by stud bolts and nuts or by cap screws which pass through its sides and are screwed into the frame beneath. This bearing may be lined either with a brass box or babbitt metal. The brass box is made in halves, one of them so formed as to prevent the box from rotating in the frame. The babbitt is cast in a recess in both frame and cap. A bearing box with the babbitt lining is shown in Fig. 104.

The babbitt does not extend quite the whole length of the box and is beveled at the ends to enable it to be chiseled out when renewal is necessary.

The cap is fastened to the frame by stud bolts and nuts. The cap is made thicker where the bolts pass through it by making " bosses " which extend upwards far enough to give a flat surface

for the nuts to rest against. Two bolts are sufficient except in cases where $L=4S$ when four are used. The cylindrical part of the bolt boss is made a trifle larger than the long diameter of the hex. nut. If the nut strikes the curved surface of the

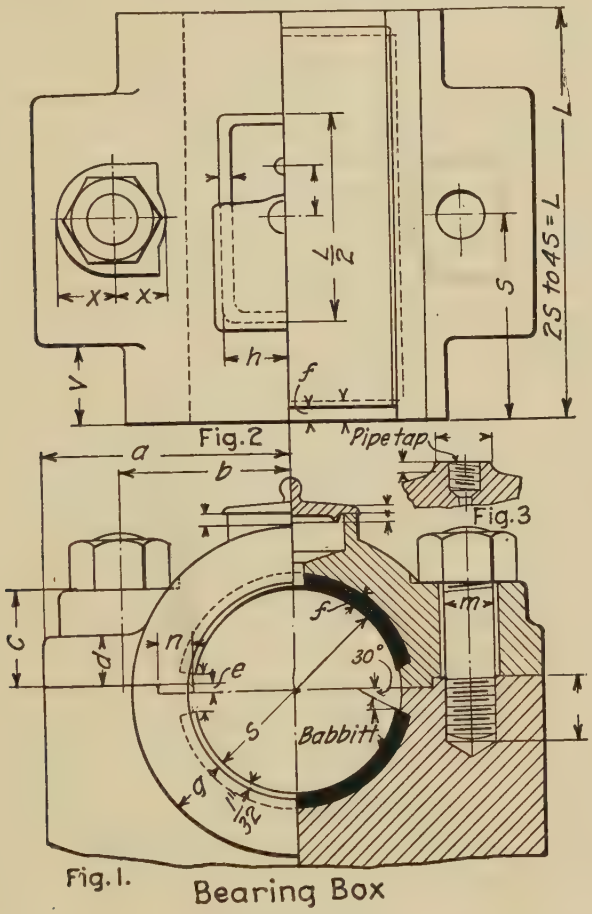

FIG. 104.

cap before resting on the boss, the cap is counterbored down to the level of the boss, the diameter of the bore being an eighth of an inch or so larger than the nut across corners. The oil for lubrication is contained in the cavity cast in the cap and flows to the bearing through holes drilled in the cap and babbitt.

This cavity has its bottom made in the form of a trough and is filled with waste to prevent the oil from flowing too freely. A cover is placed over the cavity to keep out dirt. Instead of a cavity we may use an oil cup tapped in the top of the cap. This tapped pipe hole and boss for it are shown in the sketch marked Fig. 3 in Fig. 104. Fig. 1 of Fig. 104 is a half end view of the box and a half section by a vertical plane containing the axis of the stud bolt. Fig. 2 of Fig. 104 is a half top view, on the left, of the box assembled with part of the oil box cover removed. The right hand half is a top view of the frame when the cap of the bearing has been removed.

102. The important dimensions are lettered, their values being found by substituting in the straight line formula the letter wanted and values given for α and β under that letter in the following table. S is the diameter of shaft for which the box is to be drawn. The formula is: required dimen. $= \alpha S + \beta$.

	a	b	c	e	g	h	v	n	m
α	.93	.73	.375	.02	.1875	.28	.453	.125	.125
β	.844	.328	.25	.07	.3125	.093	−.265	.0625	.375

$$d = \tfrac{7}{8}g, \qquad f = e + \tfrac{1}{16}''$$

The formula above is used for proportioning the parts of a series of machines when two sizes have been constructed and it is desired to introduce intermediate sizes. That is, suppose some part of a machine whose nominal size was say 30″, had a dimension of 6″, while the same part on a 70″ machine had a dimension of $8\frac{1}{2}''$. The values of α and β can be determined from the above straight line formula so that the dimension of this part for any sizes between 30 and 70 could be calculated as above. This determination is made as follows:

$$6'' = 30\alpha + \beta,$$
$$8\tfrac{1}{2}'' = 70\alpha + \beta.$$

Solving these two equations gives the value of $\alpha = .062$ and $\beta = 4.14$. The required dimension of the part for a 40″ machine would then be $A = 40 \times .062 + 4.14 = 6.62''$. When the sizes of

S run by fractional numbers it is somewhat tedious to make the multiplications of α and S.

103. To lessen the labor of calculation as well as to enable the value to be easily measured on a drawing it is often advantageous to construct a scale in which the base line is divided into equal spaces, the points of division being numbered according to equal values of (S). On ordinates erected at the ends of this line are measured (from the base line) values found from the formula when the value of (S) used corresponds to the values of (S) which mark the points at the ends of the base line. Joining like points on these ordinates gives an inclined line. The distance from the base line to this line, measured on any ordinate, gives the value of the dimension required for the value of (S) taken on the base line where the ordinate was erected.

104. Bearings are often made to be bolted entire to some sort of foundation or support; as a stone base, a vertical wall of a building or the ceiling of a room.

In the first case they are called *pillow blocks*, in the second, *wall* or *bracket bearings*, in the third, *hangers*.

An ordinary pillow block is shown in Fig. 105 below and consists of the following parts: Block, cap, brasses or steps, cap bolts, and foundation bolts. The dimensions for the letters given may be taken from the following formulæ:

D is the unit for most of the formulæ, L for the rest.

Take $L=2D$, $e=1.6D+1.5''$

$A=3.6D+5''$, $W_2=.7L$,

$H=1.05D+.5''$ $T=.3D+.4''$,

$W_1=.8L$, $d=.25d+.25''$

$C=2.7D+4.2$ $T_1=.3D+.3''$,

$t=.07D+\frac{1}{8}''$.

105. The "brasses" or "steps" used in these pillow blocks are made in halves whose plane of contact is usually horizontal. The load is perpendicular to this horizontal plane except in the crank shaft bearings of engines and similar machines. In these cases the dividing plane is perpendicular to the load. The steps are made with flanges at each end to prevent endwise motion

along the shaft. Motion of rotation is prevented by various devices such as stop pins, stop lugs, by making the backs of the steps octagonal or square or by curving the backs with a

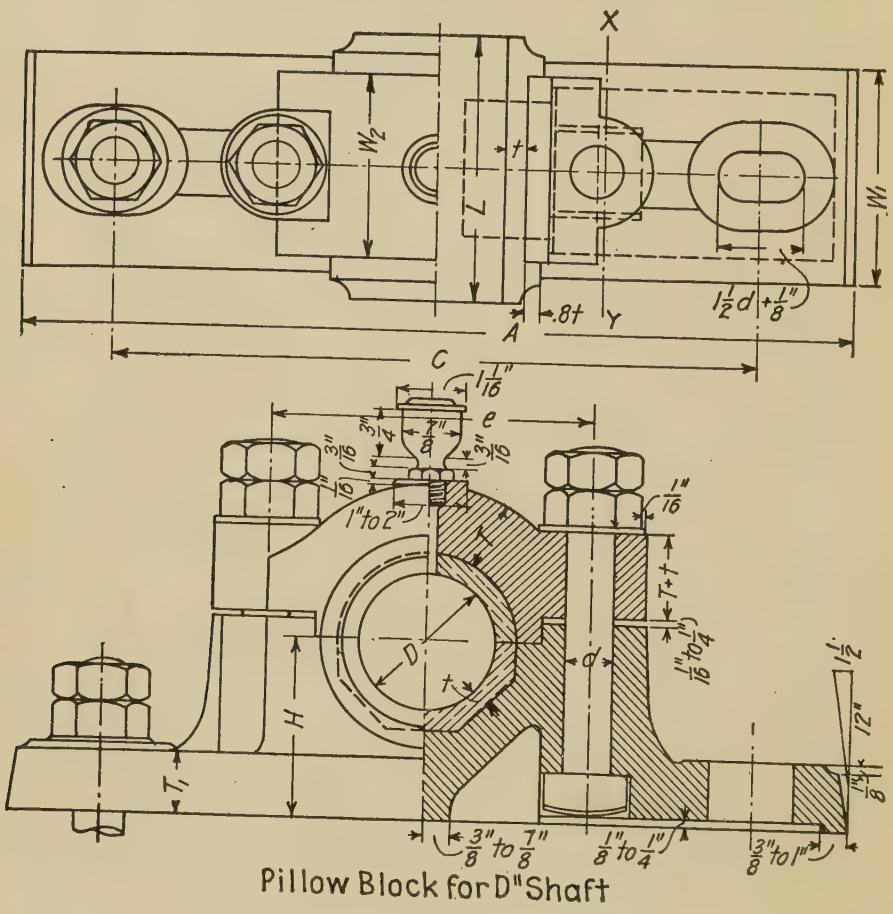

Fig. 105.

circular arc whose center is eccentric to the shaft. Fig. 106 (*A*) shows a lower step made with an octagonal back, and Fig. 106 (*B*) with a rectangular back. In both cases the upper step (not shown) may have a cylindrical back whose radius is $\frac{D}{2}+.75t$. The flange will be like those on the steps shown.

"Brasses" or "steps" are made of gun metal, phosphor or manganese bronze, white metal or "anti-friction" metal, quite as often as of brass. In many cases the steps are lined with babbitt metal which is run into spiral or longitudinal grooves, or holes drilled in the inner surface of the step.

106. The materials used for bearings vary and depend on the pressure per square inch of bearing surface. Cast iron makes a good bearing for a steel shaft when the pressure does not exceed 300 lbs. per sq.in. and the linear velocity of rubbing does not exceed 150 ft. per minute. The harder bronzes are used for high pressures and velocities. The amount and quality

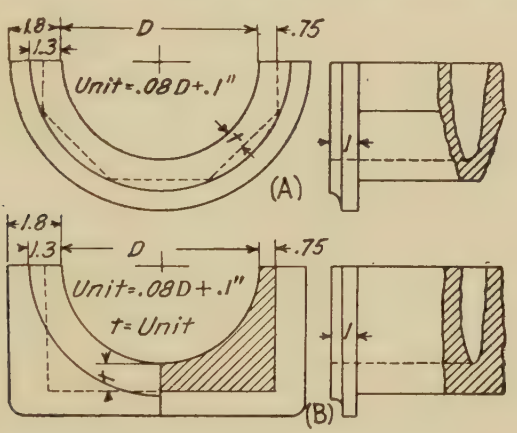

FIG. 106.—Brasses.

of lubrication greatly affects the life of a bearing as well as the amount of heating which occurs. The pressure per sq. inch allowed in bearing surfaces depends on the constancy of the load it carries, the method of lubrication and the quality of lubricant.

107. Table 16 gives the pressures used for bearings of different kinds. The efficiency of a bearing depends on the resistance it offers to the rotation of the shaft running on it. This frictional resistance to motion between two surfaces in contact is called the *coefficient of friction* (μ) and depends on the pressure, kind of surface, and velocity of rubbing.

The coefficients of friction are given for different surfaces in Table 17. The foot-pounds of work lost in friction of a bearing are equal to the load on the bearing in pounds times the coeffi-

cient of friction times the distance passed through by the rubbing surface in feet per minute.

$$P\mu V = \text{ft.-lbs. of work,}$$

$$\mu = \text{coeff. of friction.}$$

For shafts,

$$V = \frac{2\pi r N}{12},$$

where r = radius of shaft in inches, N = R.P.M. of shaft.

$$\text{The foot-lbs. of work per minute} = \frac{2P\mu\pi r N}{12}.$$

If we divide this by 33,000 ft.-lbs. (the equivalent of one horse-power) the horse-power (H) lost in friction will be expressed by the formula:

$$H = \frac{2P\mu\pi r N}{12 \times 33000}.$$

μ = coeff. of friction, P = load on bearing in lbs.,

r = rad. of shaft in inches, N = R.P.M. of shaft.

Test No. 5. Arts. 1–107 (3 hours allowed for this paper)

1. Make neat freehand sketches of the following objects: (*a*) a cone head rivet. (*b*) an angle iron with equal legs (cross section). (*c*) a pipe fitting bushing. (*d*) a R and L coupling. (*e*) a standard T. (*f*) make a *title* only for a drawing sheet in the Sheffield Scientific School on which has been drawn a stuffing box gland (half size) for a 1″ rod.

2. With the aid of sketches describe how the following four kinds of fastenings are used in connecting together parts of machines and quote an example of each one where it is preferable to use that kind of fastening in preference to the others, giving your reasons. (*a*) a bolt and a nut. (*b*) a rivet. (*c*) a cotter. (*d*) a key.

3. Draw a spring whose inside diameter is $2\frac{1}{2}$″, the diameter of the wire being $\frac{1}{2}$″ and the pitch 1″. The length of the spring is 6″.

4. How are short lengths of shafting coupled together to form a long straight shaft? Make a neat sketch of the parts used to couple these shafts and enumerate them.

5. What is a bearing? Into what classes are bearings divided? What is the effective area of a bearing? How would you calculate the

bearing area necessary to support a load acting at right angles to the axis of rotation of a shaft?

6. Calculate the foot-pounds of work expended in turning a shaft 2″ diam. 200 R.P.M. in a bearing 5″ long when the load supported is 1000 lbs. and the value of $\mu = \frac{(c\sqrt{v})}{p}$. The load acts as in question 5. $c = .43$, $v =$ rubbing veloc. in ft. per. sec.

7. What use is made in machine design of the straight line formula in proportioning the parts in a series of machines? Illustrate by a concrete example.

8. Make a tracing of the drawing furnished you, inserting all the omitted dimensions and carefully lettering any directions which may be necessary for a working drawing.

9. Make a drawing (dimensioned) of a stud bolt 1″ diam. whose grip is $2\frac{1}{4}$″.

108. Hangers are used to support shaft bearings from ceiling joists or beams. They are made of cast iron in two distinct parts, viz.: the *frame* and the *bearing*. The frame has an inverted base which spreads in a plane perpendicular to the shaft and is provided with bolt holes through which pass the hanger bolts for supporting it from the overhead beams. The frame is of a U or J form extending down from the beams as far as may be necessary to provide a support for the shaft bearing. This bearing is free to swivel around a vertical axis and turn in a vertical plane at the same time. This permits it to adjust itself to a true alignment with the shaft.

In the Seller's System the *bearing* is supported by two spherical cups which hold the spherical central portion of the bearing so that it can adjust itself to any direction of the shaft. The cups are formed in the ends of two tubes whose exterior surfaces are threaded for part of their length in order to engage with spaces on the inside of two cylinders formed in the frame. By turning these adjusting screws the bearing can be raised, lowered or clamped tightly together. These adjusting screws are locked in position by set screws. The bearing itself is made in halves, the upper one containing two receptacles for oiled waste.

Beneath the hanger is placed an oil drip dish to catch the excess oil which works out of the bearing. The drip dish may be made with hooks which hang from two lugs formed on the lowest part of the frame. The split pins pass through the hooks

into these lugs and act as a safety device to prevent the dish from being knocked off the lugs. The shaft is introduced into the hanger or the hanger is placed in position after the shaft is up. In either case a U hanger must have some opening for placing the shaft in the central space from the side or from below. This is accomplished by having a removable block in one side of the U or by removing the lower half of the hanger.

In the first case the hanger has one parting bolt and is called an *open side* hanger.

In the second case there are two bolts and the hanger is an *open end* hanger.

The construction of these hangers is shown in Fig. 107 and Fig. 108 and was evolved by Prof. Charles B. Richards. A hanger with the single or J type of frame is shown in Fig. 109, *A*, *B*, *C*. This hanger was originally designed by Mr. William Mason, of New Haven, Conn., of the Winchester Repeating Arms Company. It was first modified for use in the Sheffield Scientific School by Prof. Charles B. Richards and is shown in a still further modification in Fig. 109. The dimensions can be worked out for a series of "drops" and shaft diameters by means of the table of constants and the formula accompanying them.

The bearing in the J hanger is supported by horizontal cylindrical trunnions which rest in a yoke free to turn around a horizontal axis. Fig. 109, *D*, *E*.

109. The two dimensions on a hanger which control all the others are the "*drop*" and shaft diameter. The "drop" is the perpendicular distance from the foot pads to the center of the shaft and is indicated by D on all the hangers in sketches 107–109. The shaft diameter is indicated by d on the open side and open end hangers and by A on the J hanger.

If the "drop" and diameter of shaft are known the other dimensions of the hanger can be calculated by using the following tables on pages 130 and 131 with the formulæ accompanying them. As an example suppose d is $2''$ and D is $20''$. If L is desired for an open end hanger the formula $L=\alpha d+\beta D+\gamma$ gives by substitution of the values of α, β and γ found in table opposite L, the expression.:

$$L=(4\times 2'')+(.7\times 20'')+.8''=22.8'',$$

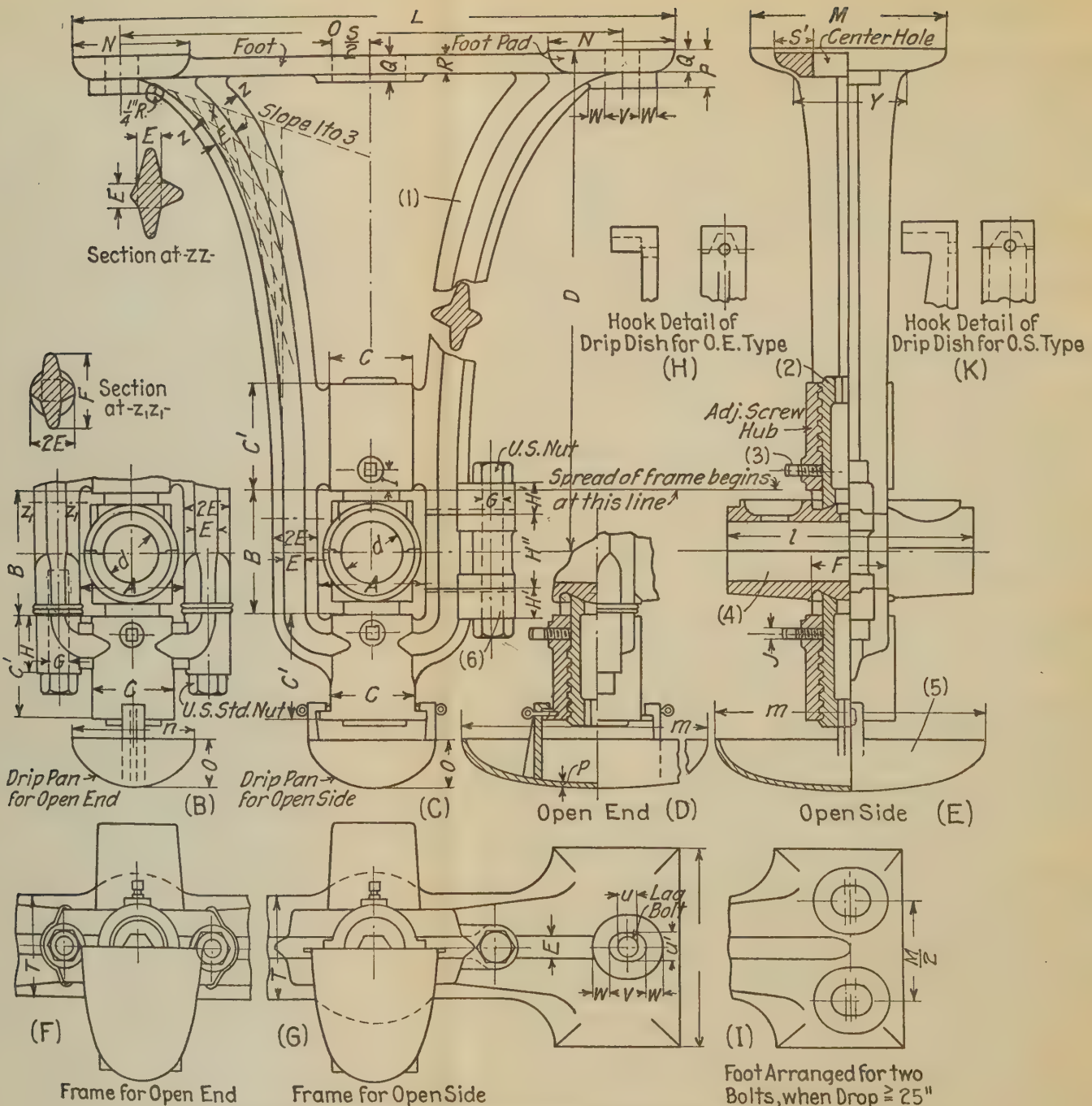

Open Side and Open End Hangers - Sellers System

FIG. 107.

(To face page 128)

which is the length of foot required. Nominal diameter of shafts increase by fourths of an inch and the actual diameters are

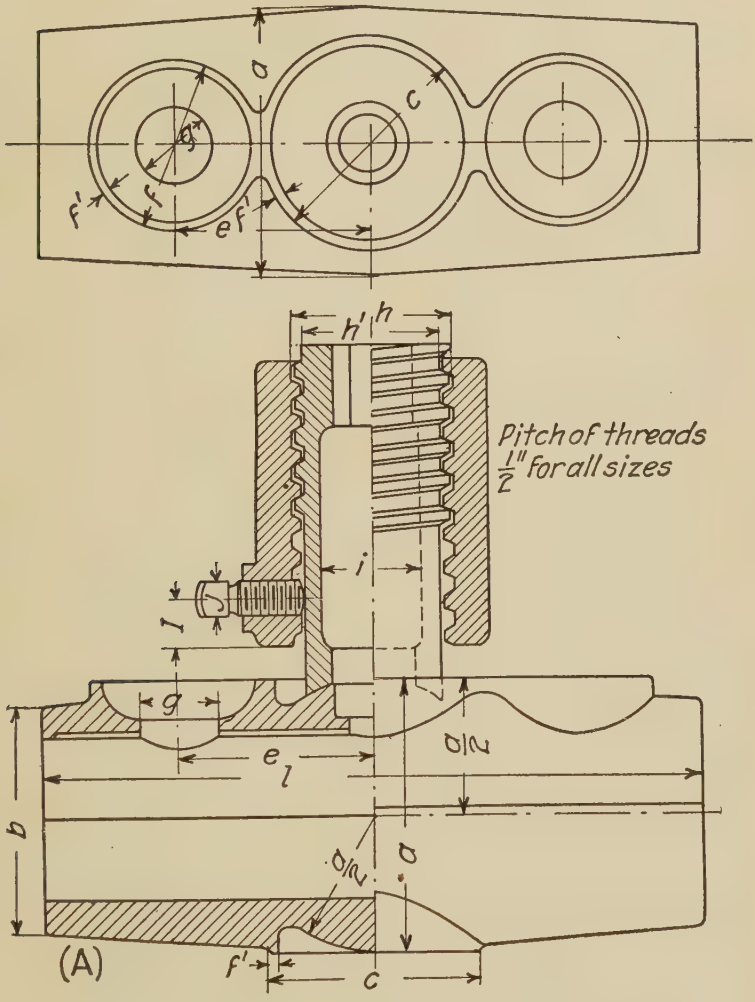

Fig. 108.
Detail of Bearing and Adjusting Screw.

usually one-sixteenth less than the nominal. The nominal is used for all calculations.

OPEN END AND OPEN SIDE HANGERS (Sellers System). Fig. 107 and Fig. 108.

Table for determining the lettered dimensions. Formula: Required dimension $= \alpha d + \beta D + \gamma$ in which d = the diameter of the shaft and D = the drop of the hanger; both in inches.

Dimension.	α	β	γ ins.	Remarks.
A	1.6	0	0.4	Width opening in frame.....
B	1.6	0	1.0	Depth opening in frame.....
C	1.0	0	1.0	Diam. adj. screw boss...
C'	0.5	0	3.0	Depth of adj. screw boss...
D	Given drop		....	.....
E	0.19	0	0.5	Thickness of frame web..
F	1.0	0	0.5	Width of frame at hub.....
G	0.19	0	0.375	Diam. parting bolt.....
H	0.375	0	1.5	
H'	0.25	0	0.5	.....
H''	$d+\frac{1}{2}''$, Side opening in frame			
I	$1\frac{1}{2}J$, End of hub to set screw			
J	$\frac{1}{4}h$, Diam. of set screw			
L	4.0	0.7	0.8	Lgth. of foot
M	1.0	0.18	2.0	Width of foot
N	1.25	0	2.0	Lgth. of foot pad.....
O	2.75	0.7	−0.2	C. to c. lag sc.
P	0.4	0	0.5	Thick. of foot at lag sc.....
Q	same as E			Thick. of foot
R	0.1	0	0.5	.....
S	0.6	0	1.5	.....
S'	0.3	0	0.75	
T	0.75	0	2.25	
U	0.19	0	0.375	Lag sc. diam.
U'	$U+\frac{1}{4}''$, width of lag sc. hole			
V	$U+\frac{1}{2}''$, length of lag sc. hole			
W	$\frac{3}{4}$ width of hole $= \frac{3}{4}U'$			
X	0.4	0.025	0.8	Thick. of frame at foot
Y	1.0	0.05	0.5	Width of frame at foot

Dimension.	α	γ ins.	Remarks.
a	1.5	0.25	Diam. shaft box at middle
b	1.25	0.25	ditto at end
c	1.0	0.75	
d	Given diam. of shaft		
e	0.95	0.5	
f	0.9	0.25	Diam. oil cellars
f'	$=$ about $\frac{1}{16}$ of (f)		
g	$=$ about $\frac{1}{2}$ of (f)		
h	0.5	1.25	Diam. of adj. screw (outside)
h'	$=h-\frac{3}{8}''$		Diam. of adj. screw at root of thread
i	0.33	0.6	Diam. of adj. screw (inside)
l	$=4d$		Lgth. of box
m	$=l+1''$ Lgth. of oil pan		
n	1.25	1.75	Width of oil pan
o	$=\frac{3}{5}n$		Depth of oil pan
p	is optional thick. of oil pan		

The pitch of the threads on the adjusting screws of the above Table is $\frac{1}{2}''$ for all sizes of hangers.

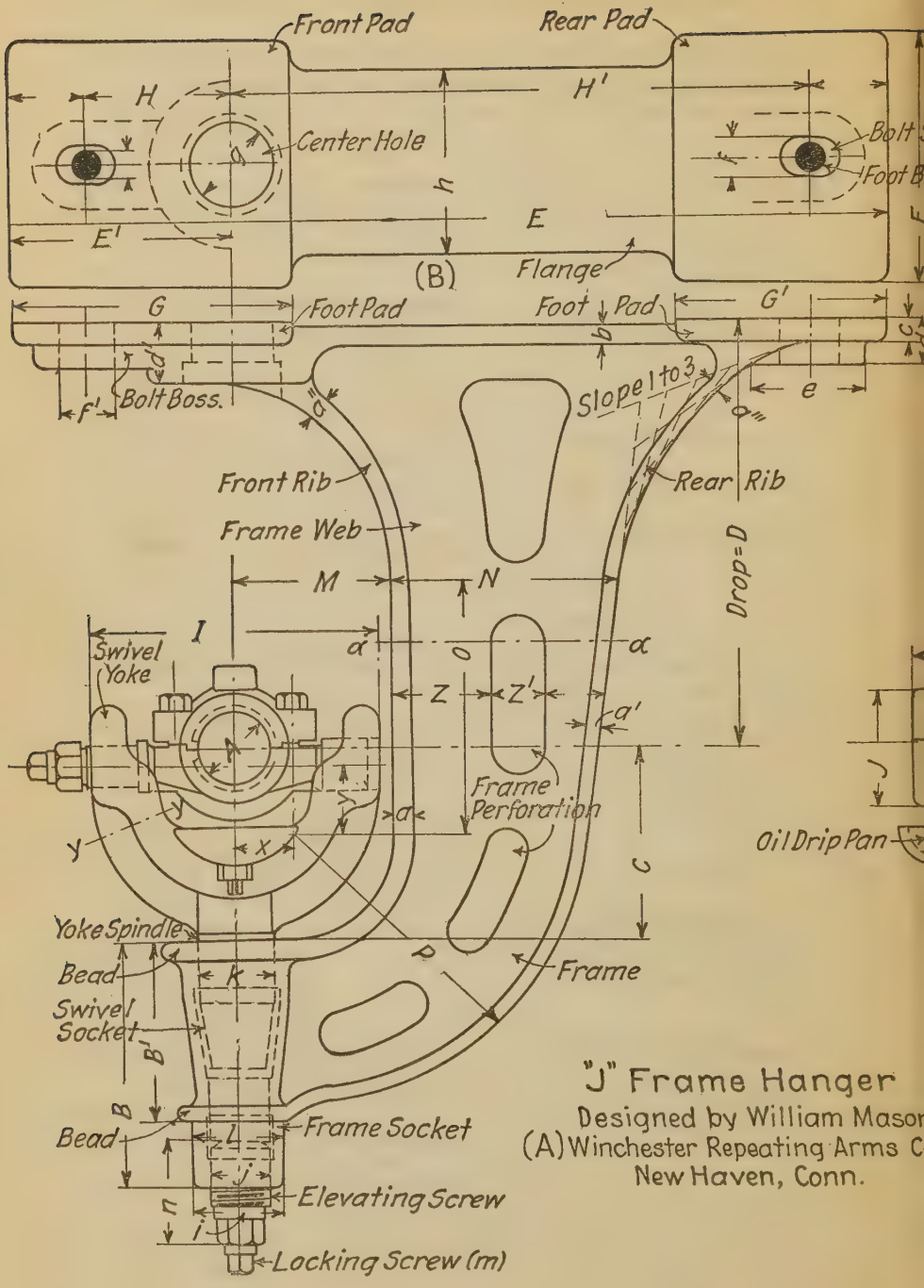

"J" Frame Hanger

Designed by William Mason

(A) Winchester Repeating Arms C

New Haven, Conn.

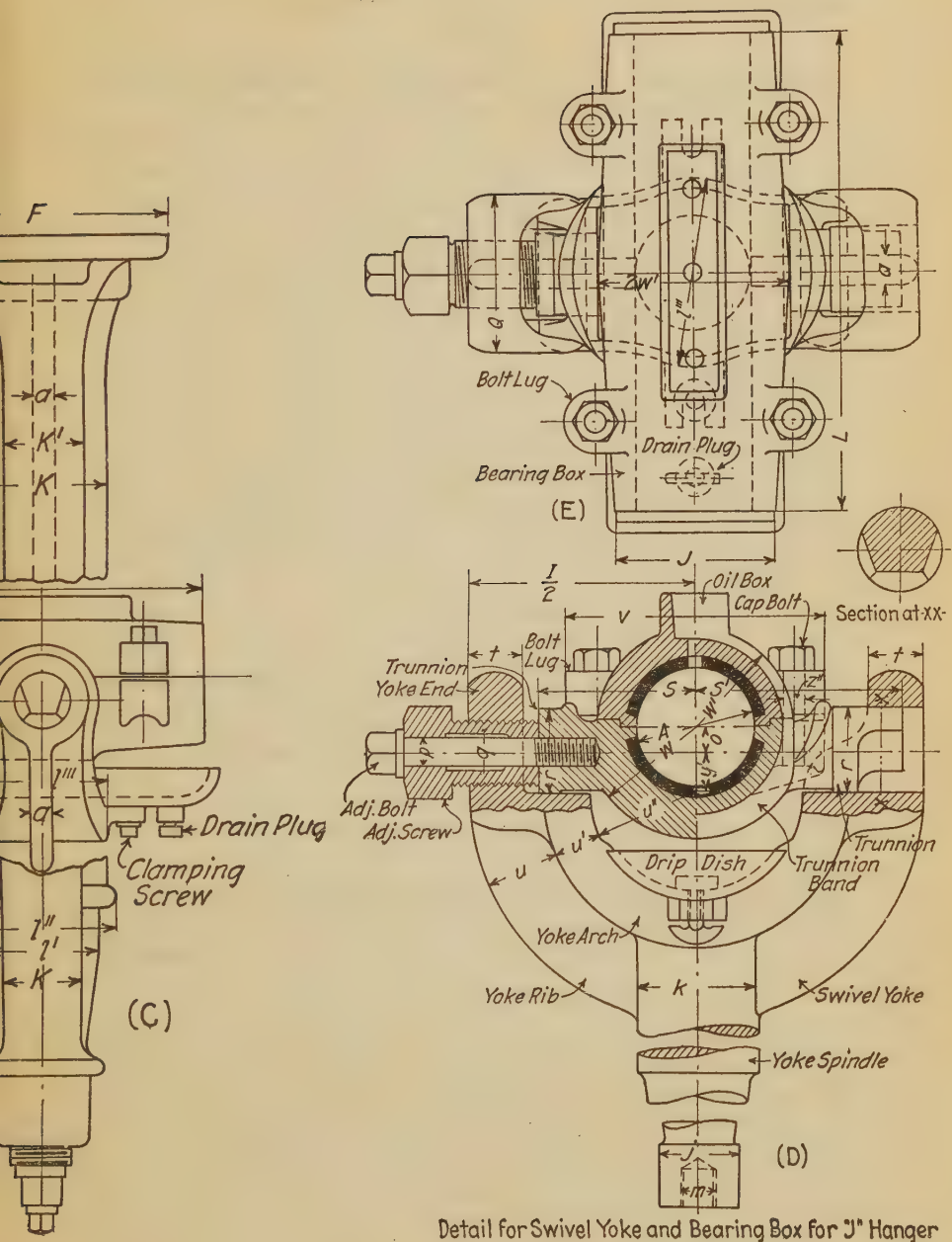

Detail for Swivel Yoke and Bearing Box for 7" Hanger

(To face page 131)

TABLE FOR DETERMINING THE LETTERED DIMENSIONS OF (J) HANGERS, Fig. 109

Formula, The required dimension equals $\alpha A+\beta$, in which A is the diam. of the shaft in inches for which the hanger is adapted.

Dimension.	Values of α	Values of β ins.	Dimension.	Values of α	Values of β ins.	Dimension.	Values of α	Values of β ins.
B	1.1	5.4	a	0.03	0.4	n	0	3.38
B'	1.0	3.5	a'	$=a-\frac{1}{16}$		o	0.05	0.35
C	1.0	4.0	a''	$=a+\frac{3}{8}''$		p	0.125	0.31
H	0.5	3.0	a'''	$=a+\frac{1}{4}''$		q	0.2	0.8
I	1.75	5.25	b	$=a$		r	0.25	1.13
J	1.25	0.62	c	$=a+\frac{1}{8}''$		s	0.9	1.07
M	1.12	2.6	d	0.25	0.875	s'	0.9	2.2
P	1.5	5.75	d'	0.5	0.75	t	0.06	1.04
Q	0.25	2.73	e	0.25	2.6	u	0.12	1.0
$E=H'+H+2\frac{2}{3}f+1.65''$			f	0.19	0.6	u'	0.2	0.56
$E'=H+1\frac{1}{3}f+0.82''$			f'	$=f+\frac{5}{8}''$		u''	$=\frac{1}{2}I-(u+u')$	
F(see Table 2 below)			g	$=k+\frac{1}{4}''$		v	1.25	2.4
$G=E'+\frac{1}{2}g+\frac{3}{4}''$			h	$=\frac{3}{4}F$		w	$=\frac{1}{2}J+\frac{1}{2}''$	
$G'=E'$			i	$=l$		w'	$=\frac{1}{2}J+\frac{1}{12}A$	
$K=l'+\frac{1}{2}''$			j	0.38	0.94	x	0.44	0.71
$K'=k$			k	0.5	1.25	y	0	1.75
$L=4A$			l	0.5	1.75	y'	0.2	0.3
$N=0.82A+0.03D+4''$			l'	0.7	1.8	z	$=\frac{4}{10}$ of width of frame	
$O=\frac{1}{2}D$			l''	$=K+a$				
H' (see Table 2 below)			l'''	$=K$		z'	$=\frac{3}{10}$ of width of frame	
			m	0.125	0.3			

TABLE (2). Formula: The required dimension $=\alpha A+\beta+D(\gamma A+\delta)$, in which $A=$ diam. of shaft and $D=$ the drop of the hanger, both in inches.

Dimension.	α	β	γ	δ
F	0.75	2.87	0.031	0.078
H'	5.1	0.6	−0.15	0.72

The Table below gives the drops of hangers for various shaft diameters.

		1	2	3	4	5	6	7
Actual shaft diameter.....	x	$1\frac{7}{16}$	$1\frac{15}{16}$	$2\frac{7}{16}$	$2\frac{15}{16}$	$3\frac{7}{16}$	$3\frac{15}{16}$	
	y	$1\frac{11}{16}$	$2\frac{3}{16}$	$2\frac{11}{16}$	$3\frac{3}{16}$	.....	$4\frac{7}{16}$	$4\frac{15}{16}$
Drop of hanger, *D*.....	*a*	8						
	b	10	10	10				
	c	13	13	13	13	13		
	e	16	16	16	16	16	16	16
	f	20	20	20	20	20	20	20
	g	...	25	25	25	25	25	25
	h	...	30	30	30	30	30	30
	i	...	...	...	36	36	36	36

In assigning a size to be drawn if the column number is given as 3, the line *x* or *y* determines the diameter of shaft to use in column 3, and the letter *a* . . . *i*, denotes the line to use for the drop. As, assignment 4*ye* would indicate a diameter of shaft of $3\frac{3}{16}''$ and a drop of 16″.

Drop hangers are also used in an inverted position and are then called *floor stands*. They answer the same purpose as a pillow block but the distance from the foot support to the center of the shaft is greater.

110. Post hangers or post boxes are used to support a shaft from a vertical post or frame work. The framework of a post hanger may be designed in the same manner and have similar shapes as the frames of drop hangers. The adjusting screws, bearing boxes, etc., can be made like those of drop hangers.

Fig. 110 shows the frame for a post hanger of the open side type. The open end type can be made to open at the end like the open end drop hanger. The U frame can also be adapted for post use, the swivel and bearing box being the same as the J hanger.

A post hanger containing a ball bearing is shown in Fig. $110\frac{1}{2}$. The extension from the face of the post support to the center of the shaft varies as follows, reference being made to Table 2, Art. 113. Bearings 1 and 2 have extensions of 7″ and 8″. Bearings 3, 4 and 5 have extensions of 8″ and 9″. Bearings 6 and 7 have extensions of 9″ and $10\frac{1}{2}''$. Bearings

8, 9 and 10 have extensions of $10\frac{1}{2}''$ and $12''$. Bearings 11, 12, 13 have extensions of $12''$. The main dimensions of post hangers are given in a Table of Dimensions on page 136 referring to Fig. $110\frac{1}{2}$.

111. A Wall Bracket is used when the distance from a vertical support to the center of the shaft is too great to allow a post hanger to be used. It consists of a casting in the form of

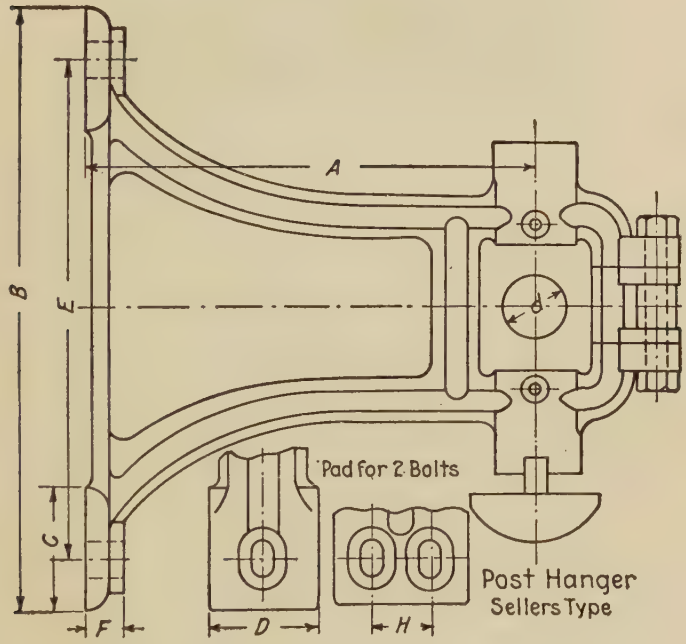

Fig. 110

a right angled triangle with a short leg vertical against the support and another leg horizontal supporting a pillow block. The bracket in Fig. 111 is taken from Spooner's Mach. Const. and Design. It is a good illustration of the ordinary type of wall bracket. The values of A and W_1 are regulated by the length and breadth of the pillow block supported. The unit for the dimensions is $D+\frac{1}{2}''$. D=the diameter of shaft supported by the pillow block. The pillow block dimensions can be found in Art. 104.

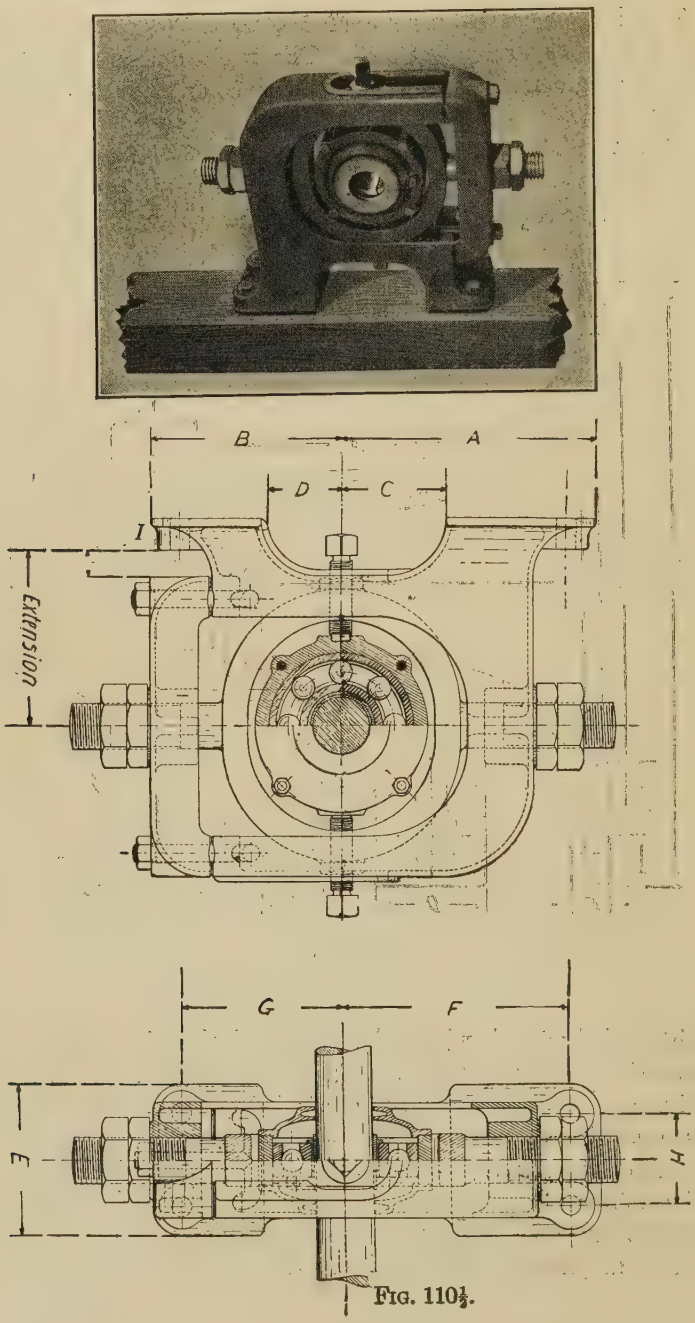

FIG. 110½.

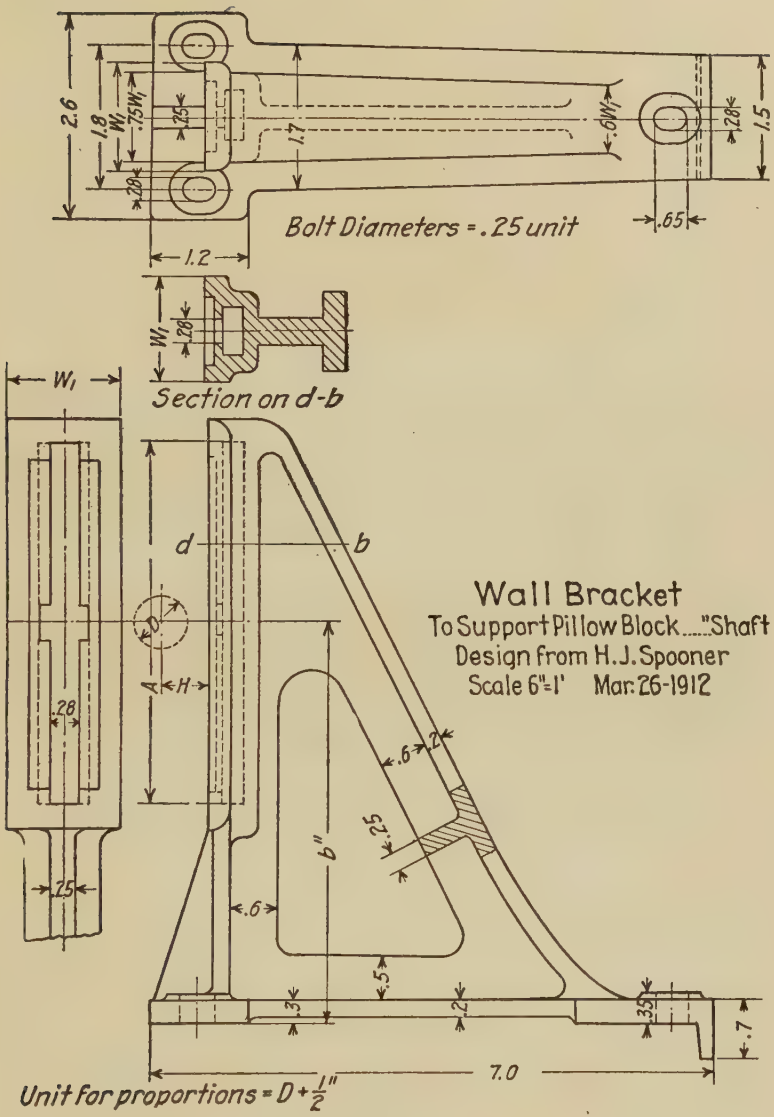
Bolt Diameters = .25 unit
Section on d-b
Wall Bracket
To Support Pillow Block ..... "Shaft
Design from H.J. Spooner
Scale 6"=1' Mar: 26-1912
Unit for proportions = D + 1/2"
7.0

FIG. 111.

MAIN DIMENSIONS OF BALL BEARING POST HANGERS

Extension. Inches.	*A*	*B*	*C*	*D*	*E*	*F*	*G*	*H*	*I*	No. Bolts.	Diam Bolts.
7 or 8	8	6	3	$2\frac{1}{2}$	5	7	5	3	$1\frac{1}{4}$	3	$\frac{1}{2}$
8 or 9	$9\frac{1}{4}$	$7\frac{1}{4}$	$3\frac{3}{4}$	3	6	8	6	$3\frac{1}{2}$	$1\frac{1}{4}$	4	$\frac{5}{8}$
9 or $10\frac{1}{2}$	11	$8\frac{1}{4}$	$4\frac{1}{2}$	$3\frac{1}{2}$	$6\frac{1}{2}$	$9\frac{3}{4}$	7	4	$1\frac{3}{8}$	4	$\frac{3}{4}$
$10\frac{1}{2}$ or 12	12	$9\frac{1}{2}$	$5\frac{1}{2}$	4	$7\frac{1}{2}$	$10\frac{1}{2}$	8	$4\frac{1}{2}$	$1\frac{1}{2}$	4	$\frac{7}{8}$
12	14	$10\frac{1}{2}$	7	$4\frac{1}{2}$	$7\frac{1}{2}$	$12\frac{1}{2}$	9	$4\frac{1}{2}$	$1\frac{3}{4}$	4	1

112. The bearings shown thus far have been of the plain type without special devices for automatic lubrication. In such bearings the oil is supplied from an oil cup in the top through an oil hole in the cap.

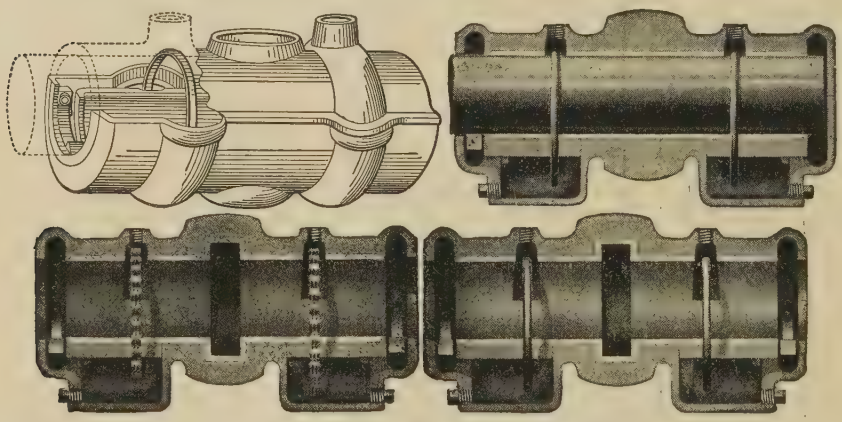

FIG. 112.

Self oiling devices include *Chain Oilers, Ring Oilers, and Collar Oilers.* The first two are similar in their principle of operation. A ring of metal or a flexible chain rests on and is rotated by the shaft. The chain or ring dips into a reservoir of oil below the shaft, lifts the oil to the top of the shaft, and allows it to flow over the bearing. See Fig. 112. Types from H. L. Caldwell & Son Co., Chicago.

Any surplus oil is removed by scrapers or wipers at each end of the bearing and returned to the oil reservior. These wipers are sometimes made of lead and pressed against the shaft by springs. The oil is thus used over again and there is not the need of constantly renewing the oil as in the case of plain oiled bearings. *Collar oiled* bearings are similar in principle to the ring oiled bearings, the ring being replaced by a small collar

fastened to the shaft. This dips into the oil reservoir and raises the oil to the top of the shaft.

113. There are other types of bearings for rotating shafts in which the shaft is supported on rollers or balls. The object of these bearings is to reduce the bearing friction and lessen the cost of maintenance, both tending towards increased efficiency in power transmission. The coefficient of friction for loads ranging from the maximum to half the allowable load, varies from 0.0013 to 0.0017.

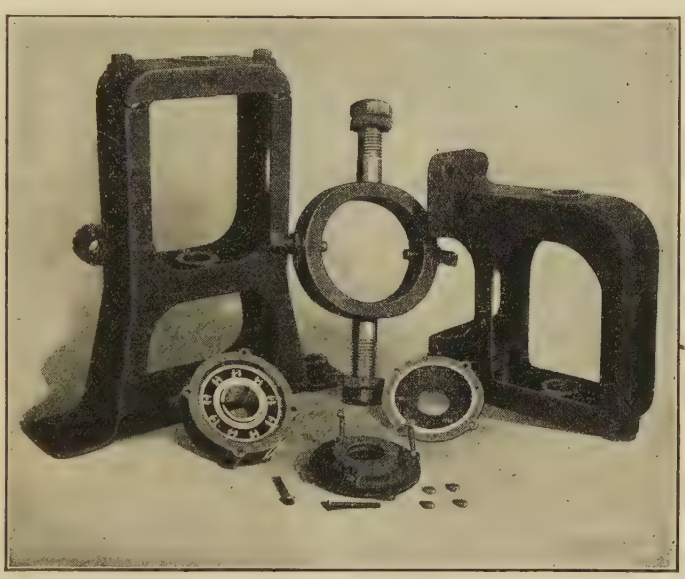

FIG. 113½.

For smaller loads it is somewhat greater. Fig. 113 shows a hanger, made by the Hess-Bright Mfg. Co., which contains an annular ball bearing. Fig. 113½ is a view of a dissembled hanger and a post hanger. These hangers are designed for loads from 550 lbs. to 10,000 lbs. The ball races are curved with a radius of $\frac{9}{8}$ to $\frac{11}{8}$ times that of the ball, according to the system of Prof. Stribeck. The safe working load on a ball for a two point bearing recommended by Prof. Stribeck is $P = 2100d^2$ (d = diam. of ball). The total load on a bearing of this kind is $W = \frac{PN}{5}$, where N is the number of balls in the race and P the heaviest load on any one ball.

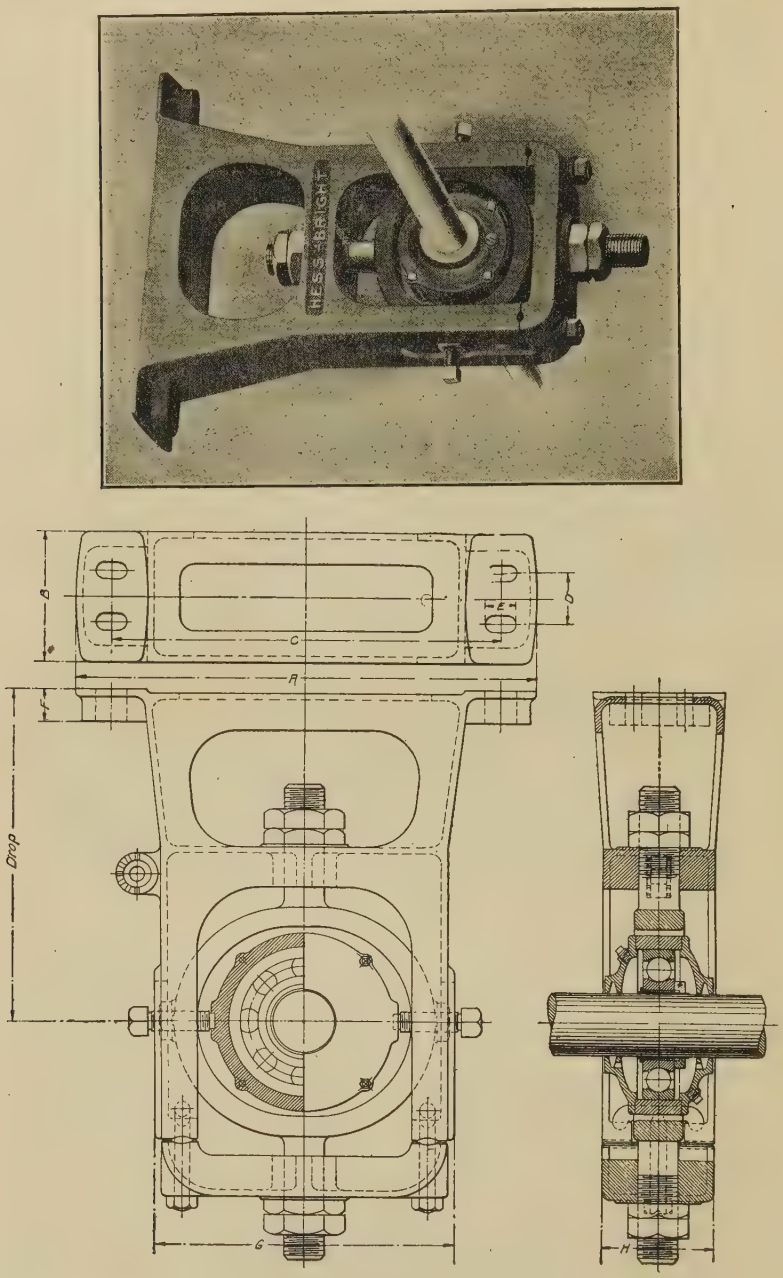

FIG. 113.

TABLE X

BALL-BEARING LINE SHAFT CEILING HANGERS

Main Dimensions of Hangers, Standard Hanger "Feet" Dimensions

Pattern No.		Drop"	A"	B"	C"	D"	E"	F"	G"	H"	No. of Bolts.	Dia." of Bolts.
Hanger "A"	5465	8	15	4	12	..	1½	1	9½	3¾	2	⅝
	5466	10	15½	4½	12½	..	1½	1	9½	3¾	2	⅝
	5467	12	16¼	4½	13	..	1½	1	9½	3¾	2	⅝
	5468	15	17¼	4¾	13¾	..	2	1	9½	3¾	2	⅝
	5469	18	18	5	14½	..	2	1	9½	3¾	2	⅝
	5470	21	19	5¼	15¼	2½	2	1¼	9½	3¾	4	⅝
	5471	24	20	5½	16	2½	2	1¼	9½	3¾	4	⅝
Hanger "B"	5480	10	18	5¼	15	..	1½	1¼	11½	5	2	⅝
	5481	12	19¼	5½	16	..	1½	1¼	11½	5	2	⅝
	5482	15	21	5¾	17¾	..	1½	1¼	11½	5	2	⅝
	5483	18	22¾	6	19¼	..	1½	1¼	11½	5	2	⅝
	5484	21	24½	6¼	21	3	2	1½	11½	5	4	⅝
	5485	24	26½	6½	22½	3	2	1½	11½	5	4	⅝
	5486	27	28¼	6¾	24	3	2	1½	11½	5	4	⅝
	5487	30	30	7	25¾	3	2	1½	11½	5	4	⅝
Hanger "C"	5495	12	22	5½	18	..	1¾	1½	13½	5	2	¾
	5496	15	24	6	19½	..	1¾	1½	13½	5	2	¾
	5497	18	25½	6½	21	..	1¾	1½	13½	5	2	¾
	5498	21	27¼	7	22½	3¼	2½	1¾	13½	5	4	¾
	5499	24	29	7¼	24	3¼	2½	1¾	13½	5	4	¾
	5500	27	30¾	7¾	25½	3¼	2½	1¾	13½	5	4	¾
	5501	30	32½	8¼	27	3¼	2½	1¾	13½	5	4	¾
	5502	33	34¼	8¾	28½	3¼	2½	1¾	13½	5	4	¾
	5503	36	36	9	30	3¼	2½	1¾	13½	5	4	¾
Hanger "D"	5419	15	25	7½	21	3¼	2	1¾	16⅝	7	4	⅞
	5420	18	26½	8	22¼	3¼	2	1¾	16⅝	7	4	⅞
	5421	21	28	8¼	23½	3¼	2	1¾	16⅝	7	4	⅞
	5422	24	29¾	8½	24¾	3¼	2	1¾	16⅝	7	4	⅞
	5423	27	31¼	8¾	26	4	3	1¾	16⅝	7	4	⅞
	5424	30	32¾	9	27¼	4	3	1¾	16⅝	7	4	⅞
	5425	33	34½	9¼	28¾	4	3	1¾	16⅝	7	4	⅞
	5426	36	36	9½	30	4	3	1¾	16⅝	7	4	⅞
Hanger "E"	5429	15	26¼	7½	22	3¼	1½	2	18¾	7	4	1
	5430	18	27½	8	23¼	3¼	1½	2	18¾	7	4	1
	5431	21	29	8¼	24½	3½	2	2	18¾	7	4	1
	5432	24	30½	8¾	25½	4½	2	2	18¾	7	4	1
	5433	27	31¾	9	26¾	4½	2	2	18¾	7	4	1
	5434	30	32¼	9¼	27¾	4½	3	2	18¾	7	4	1
	5435	33	34¾	9¾	29	4½	3	2	18¾	7	4	1
	5436	36	36	10	30	4½	3	2	18¾	7	4	1

TABLE Y

No.	Brg.	Load in Lbs.	Hanger. Size.	Drop of Hanger (inches).										
				a	*b*	*c*	*d*	*e*	*f*	*g*	*h*	*i*	*k*	*l*
1	$\frac{15}{16}M$	850	*A*	8	10	12	15	18	21	24				
2	$1\frac{3}{16}M$	1100	*A*	8	10	12	15	18	21	24				
3	$1\frac{7}{16}M$	1750	*B*	..	10	12	15	18	21	24	27	30		
4	$1\frac{11}{16}M$	2100	*B*	..	10	12	15	18	21	24	27	30		
5	$1\frac{15}{16}M$	2400	*B*	..	10	12	15	18	21	24	27	30		
6	$2\frac{3}{16}M$	3300	*C*	..	..	12	15	18	21	24	27	30	33	36
7	$2\frac{7}{16}M$	4400	*C*	..	..	12	15	18	21	24	27	30	33	36
8	$2\frac{11}{16}M$	5000	*D*	..	..	..	15	18	21	24	27	30	33	36
9	$2\frac{15}{16}M$	5700	*D*	..	..	..	15	18	21	24	27	30	33	36
10	$3\frac{3}{16}M$	6400	*D*	..	..	..	15	18	21	24	27	30	33	36
11	$3\frac{7}{16}M$	7700	*E*	..	..	..	15	18	21	24	27	30	33	36
12	$3\frac{11}{16}M$	8400	*E*	..	..	..	15	18	21	24	27	30	33	36
13	$3\frac{15}{16}M$	10000	*E*	..	..	..	15	18	21	24	27	30	33	36

1″ vertical and $\frac{1}{2}$″ horizontal adjustment from central position.

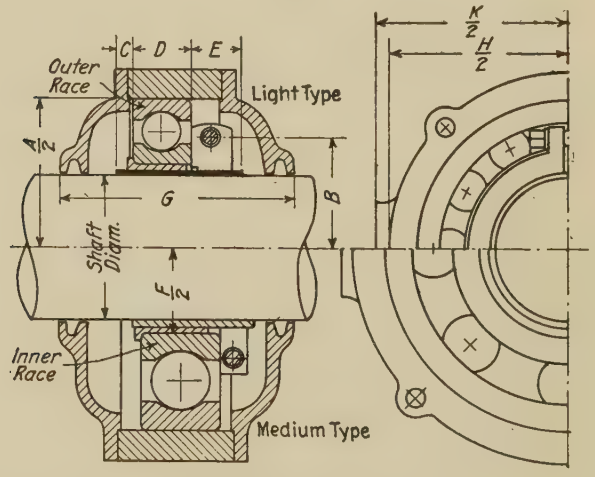

FIG. 114.
Hess-Bright Ball-Bearing Adapter.

The ball races are usually made to hold from 8 to 20 balls. The inner race is fastened to a split bushing firmly clamped to the shaft. The outer race is free to move in an endwise direction. A detail of the bearing as used on line and jack shafts is shown

in Fig. 114. The dimensions of these bearings will be found in the Table Z below.

The diameter of balls in these bearings will be found in this Table also. The number of balls in each one may be calculated from the formulæ in Art. 113. The principal dimensions of the hangers are given in the Tables X, Y, following Fig. 113.

Table Z

DIMENSIONS OF ADAPTER BEARINGS FOR BOTH CEILING AND POST HANGERS

M Bearings for General Work

Shaft diam. ins.	*A* ins.	*B* ins.	*C* ins.	*D* ins.	*E* ins.	*F* ins.	*G* ins.	*H* ins.	*K* ins.	Dia. of Balls ins.	No. of bearing.
$\frac{15}{16}$	2.83	.81	.375	.75	.531	1.18	$3\frac{1}{8}$	$3\frac{5}{8}$	$3\frac{7}{8}$	$\frac{7}{16}$	306
$1\frac{3}{16}$	3.14	.93	.375	.83	.420	1.37	$3\frac{1}{4}$	4	$4\frac{1}{4}$	$\frac{1}{2}$	307
$1\frac{7}{16}$	3.93	1.31	.375	.98	.379	1.77	$3\frac{5}{8}$	$4\frac{7}{8}$	$5\frac{1}{8}$	$\frac{5}{8}$	309
$1\frac{11}{16}$	4.33	1.50	.375	1.06	.534	1.96	$3\frac{3}{4}$	$5\frac{3}{8}$	$5\frac{5}{8}$	$\frac{11}{16}$	310
$1\frac{15}{16}$	4.72	1.62	.375	1.14	.447	2.16	$3\frac{7}{8}$	$5\frac{3}{4}$	6	$\frac{3}{4}$	311
$2\frac{3}{16}$	5.51	1.87	.375	1.30	.528	2.56	$4\frac{3}{8}$	$6\frac{5}{8}$	$6\frac{7}{8}$	$\frac{7}{8}$	313
$2\frac{7}{16}$	6.29	2.12	.375	1.46	.509	2.95	$4\frac{5}{8}$	$7\frac{1}{2}$	$7\frac{3}{4}$	1	315
$2\frac{11}{16}$	6.69	2.31	.375	1.53	.595	3.15	$4\frac{7}{8}$	8	$8\frac{1}{2}$	$1\frac{1}{16}$	316
$2\frac{15}{16}$	7.08	2.43	.375	1.61	.640	3.34	$4\frac{7}{8}$	$8\frac{1}{2}$	9	$1\frac{1}{8}$	317
$3\frac{3}{16}$	7.48	2.43	.375	1.69	.654	3.54	$5\frac{1}{8}$	9	$9\frac{1}{2}$	$1\frac{3}{16}$	318
$3\frac{7}{16}$	8.64	2.62	.375	1.85	.681	3.93	$5\frac{3}{8}$	10	$10\frac{1}{2}$	$1\frac{5}{16}$	320
$3\frac{11}{16}$	8.85	2.81	.375	1.93	.726	4.13	$5\frac{5}{8}$	$10\frac{5}{8}$	$11\frac{1}{4}$	$1\frac{3}{8}$	321
$3\frac{15}{16}$	9.44	2.87	.375	1.97	.718	4.33	$5\frac{7}{8}$	$11\frac{1}{4}$	$11\frac{3}{4}$	$1\frac{1}{2}$	322

114. Roller bearings are used in place of plain bearings whenever the conditions demand less friction and the loads carried are very heavy. The frictional resistance is less than in plain bearings due to rolling contact. The rollers are separated at the ends by rings into which the ends of the rollers are fitted by turning them down. The shaft is fitted with a hardened steel sleeve carefully ground. A similar liner fits the casing of the bearing, the two forming a hard and smooth path for the rollers. The rollers themselves are made of tool steel hardened and ground. The dimensions of these rollers may be determined from the following formulæ taken from Spooner's Machine Construction and Drawing. d = diam. of roller, D = diam. of

shaft, $d = 0.08D + \frac{3}{16}''$ (nearest $\frac{1}{16}''$ being taken) used for shaft diameters up to about 6″. The safe load per inch of the total length of rollers may $= 2000d^2$ lbs. assuming that *one-third of the rollers support the load.*

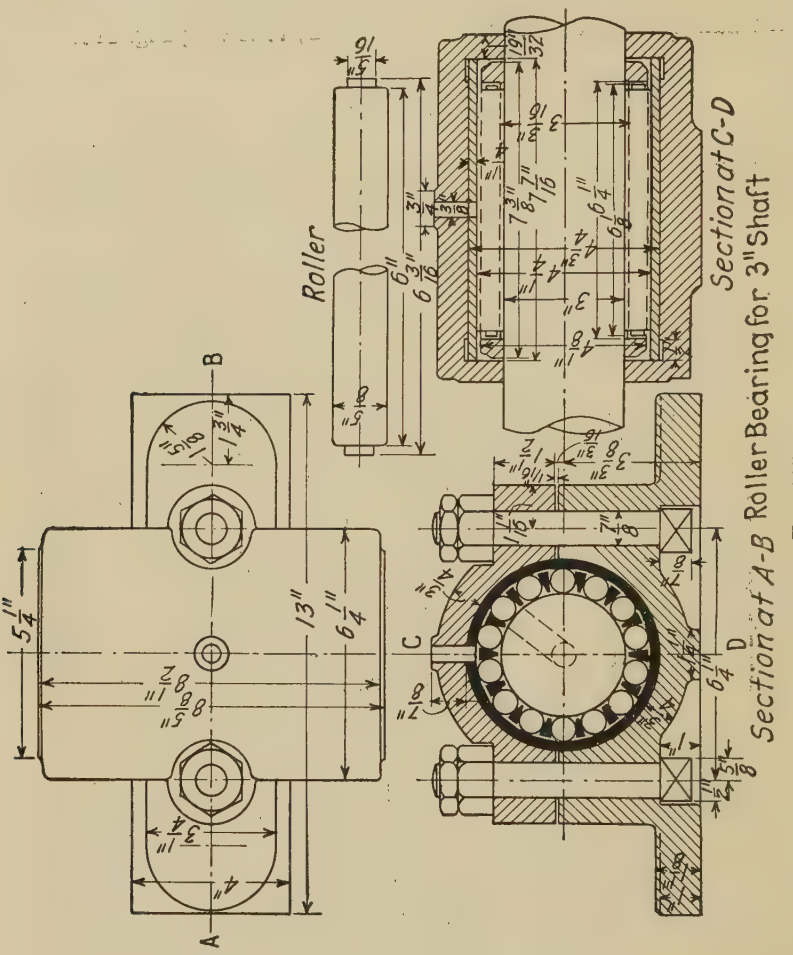

FIG. 115.

$W = 33400 \dfrac{d^2NL}{S}$, where W = the total safe load on a journal bearing in lbs. (with not less than six rollers);

L = length of each roller in inches;

N = number of rollers;

d = diam. of rollers in inches;
S = linear velocity of convex bearing surface (sleeve) in feet per minute for values above 50 ft. per minute;
D = diam. of shaft (or bore of sleeve).

In Fig. 115 is shown a roller bearing pillow block.

115. The distance apart of bearings designed to support shafting, depends on the number and position of the pulleys and gears which take power from the shaft. The bearings must be close enough to prevent undue sagging or deflection of the shaft between them. This deflection is produced by the weight of the pulleys or gears, the pull on the belts, weight of shaft itself, etc.

Pulleys are placed as close to bearings as possible. The amount of deflection between bearings depends on the rotative speed of the shaft. The critical speed in R.P.M. for a given deflection δ is R.P.M. $= 200\sqrt{1 \div \delta}$, where δ is in fraction of an inch.

For shafts carrying a fair proportion of pulleys the span (S) in feet between hangers may be taken as $S = 6\sqrt{d}$, d = diameter of shaft in inches. If the shaft is used for transmission only the above distance may be increased 50%.

For high speed unloaded shafting

$$S = 175\sqrt{\frac{d}{N}};$$

N = R.P.M.;
d = shaft diam. in inches;
S = span in feet (not to be exceeded).

INSTRUCTIONS

Bearing Boxes

Before coming to class construct a scale to use for obtaining the lettered dimensions on bearing boxes from 1″ to 5″. Use No. 1 paper and hard pencil. Lay off the values of *a–b–c–d–e–g–h–v* above the base line, *m* and *n* below it. Mark all the inclined lines in the scale by their respective letters. Scale ordinates are to be full size and the dimensions for the box you draw are to be taken from the scale with dividers. The

dimension numerals finally placed on the completed bearing box drawing can be obtained by measurement on the drawing itself.

To find the diameter of shaft to use in drawing the bearing box, take the following data: The vertical load carried by the box is $W = (\quad)$ lbs. The length of box $L = 2S$. The pressure per sq.in. of projected area is $p = (\quad)$ lbs. The diam. S calculated from above data is $''$.

Plate 1, No. 3 paper. 2 hours allowed for drawing the views shown in Fig. 104.

Exercise 2 on Plate 1. 2 hours allowed for drawing a side view of the box with the left hand half representing a vertical longitudinal section through the axis of the shaft. Use the method of oiling by (*a*) oil cup, (*b*) cast receptacle in cap. Give *all* dimensions which are indicated by letters or assumed by the draughtsman in the making of the drawing. Those who have a prime No. for their assignment No. may use oiling method (*a*), all others use method (*b*). Total av. time for this plate is 5.75 hours.

Also make either: (*c*) a working drawing of the cap alone or (*d*) make a projection of the box when viewed at an angle of 45° with the horizontal. Place this view above and to the right of the front view by projecting from the front view with a 45° triangle. Name of this plate to be chosen by the student.

TABLE OF DATA FOR BEARING BOX PLATE

No.	1	2	3	4	5	6	7	8	9	10	11	12	13	14	15	16
W	400	600	400	600	400	600	400	700	500	700	500	700	500	700	500	700
p	50	56	45	52	41	48	32	48	57	52	62	45	40	42	35	40

Prob. 1. Calculate the strain per sq.in. in the threaded portion of the cap bolts if the load W is doubled and acts upward.

Prob. 2. Calculate the horse-power lost in friction in your bearing box, if the shaft makes 200 R.P.M. and the value of μ is taken as $\left(\frac{c\sqrt{v}}{p}\right)$.

c = constant obtained from experiment = .43.

v = rubbing veloc. in ft. per sec.

Prob. 3. Draw the *cap* of a pillow block for a 2″ shaft. Give all dimensions.

Prob. 4. Draw the base of a pillow block for a $2\frac{1}{2}''$ shaft. Complete dimensions.

Prob. 5. Draw the steps of a 3″ pillow block. Fully dimension.

Hangers

Open side hanger (Sellers System) (*A*).
Open end hanger (Sellers System) (*B*).
J hanger (*C*).

The hanger to be drawn will be a ( ) hanger (the line to use above being indicated in the table below). Drop = ( ), shaft diam. = ( ). It will be drawn either *assembled* or in *detail*, the views required being indicated under the respective heads of assembly and detail. Time allowed in class 10 hours. Av. time for O.E. or O.S. hanger is 13 hours, for J hanger 11 hours, for ball bearing hanger 11 hours.

Assignment Table for Hangers

Assign. No.	1	2	3	4	5	6	7	8	9	10	11	12
Kind of Hanger....	*A*	*B*	*A*	*B*	*C*	*A*	*B*	*C*	*A*	*B*	*C*	*A*
Detailed.....	..	..	yes	yes	..	..	..	yes	..	yes	..	..
Assembly....	yes	yes	..	..	yes	yes	yes	..	yes	..	yes	yes
Column No. in Text (Art. 109)..	1	1	2	2	2	3	3	2	4	3	2	5
Line for diam. shaft.	*x*	*y*	*x*	*y*	*x*	*x*	*y*	*y*	*x*	*x*	*y*	*x*
Line for *D*...	*c*	*e*	*e*	*f*	*e*	*f*	*e*	*e*	*g*	*e*	*f*	*h*

Assignment Table for Hangers (Cont.)

Assign No.	13	14	15	16	17	18	19	20	21	22	23	24
Kind of Hanger.....	*B*	*A*	*B*	*C*	*A*	*B*	*C*	*A*	*B*	*C*	*A*	*B*
Detailed.....	yes	..	..	..	yes	yes	yes	..	..	..	yes	..
Assembly	..	yes	yes	yes	..	..	..	yes	yes	yes	..	yes
Column No. in Text (Art. 109)..	4	1	4	3	5	4	3	2	3	3	3	3
Line for diam. shaft.	*y*	*y*	*x*	*x*	*x*	*y*	*y*	*y*	*y*	*x*	*y*	*x*
Line for *D*...	*e*	*f*	*f*	*f*	*g*	*g*	*e*	*e*	*f*	*e*	*g*	*g*

Views of Hangers

Hanger Assembled

(1) Front elevation (looking at the end of the shaft) showing the right hand half by an outside view and the left hand half by a section of the box and part of adj. screws.
(2) Side elevation, showing the left hand half in section.
(3) Bottom view, half of drip dish removed.
(4) Frame Sections. Cut the frame by one or more horizontal planes, also in the (J) hanger show a section of the yoke.

A bill of material must be placed on the sheet of drawings (Art. 17).

Hanger Detailed

(1) FRAME (including closing piece and its bolts).
  (*a*) Front view one-half (partly) in section.
  (*b*) Side view one-half (partly) in section.
  (*c*) Bottom views.
  (*d*) Horizontal cross-section of leg.
(2) ADJUSTING SCREW. (*a*) Half longitudinal section (half outside).
  (*b*) End view.
(3) BEARING BOX. Upper and lower halves together.
  (*a*) Half lengthwise section of upper half and outside of lower half.
  (*b*) Top view.
  (*c*) End view, half in section (right or left hand side).
(4) DRIP DISH. Side and top and end views, sectioned where necessary.

Following details in addition to above for (J) hanger only:

(5) YOKE. Front, side and bottom views and section of yoke.
(6) ADJUSTING SCREWS (for yoke and for journal box).

Detail drawings must be completely dimensioned, finished surfaces marked (*f*), material noted for each part, the number wanted of each and the name of each part printed beneath it, as well as its number.

A bill of material must be placed on the drawing (Art. 17).

The scale of the drawing must be such as to allow the assembled views to be drawn on a No. 3 sheet. The details can be drawn to various scales depending on the size of the part in question. Use No. 3 paper for details.

In case the assignment number as posted on the bulletin board has a number in parenthesis above it the student will draw a detail of that part of the hanger which is opposite the number in parenthesis in the list above under hanger detailed, corresponding to the number above the assign-

ment No., viz.: $\frac{(3)}{2}$ means draw a detail of the bearing box for an open end hanger whose dimensions will be found by reference to the table in Art. 109 on page 132.

Prob. 1. Instead of plain bearing, design ring oiled bearing.

Post Hangers or Post Boxes

Prob. 1. Design a post hanger for a $(d)''$ shaft when the distance from the face of the post to center of shaft is $(A)''$. Use the open side type of U frame, as in Fig. 110, No. 3 paper.

Prob. 2. Same as above, but using "J" type of frame and swivel yoke, No. 3 paper.

ASSIGNMENT TABLE

No.	d	A	B	C	D	E	F	H	Foot. No.	Bolts. Diam.
1	$1\frac{1}{4}$	5	$14\frac{3}{4}$	$3\frac{3}{8}$	6	12	$\frac{3}{4}$	...	2	$\frac{1}{2}$
2	$1\frac{11}{16}$	6	18	4	$6\frac{1}{2}$	$15\frac{1}{2}$	$\frac{7}{8}$	...	2	$\frac{5}{8}$
3	$1\frac{15}{16}$	8	$23\frac{1}{4}$	$5\frac{1}{2}$	7	$19\frac{3}{4}$	1	...	2	$\frac{3}{4}$
4	$2\frac{7}{16}$	9	25	6	$7\frac{1}{2}$	21	1	...	2	$\frac{7}{8}$
5	$2\frac{15}{16}$	9	26	6	8	22	$1\frac{1}{8}$	...	2	$\frac{7}{8}$
6	$3\frac{3}{16}$	11	$29\frac{1}{4}$	$6\frac{1}{2}$	$9\frac{1}{2}$	$25\frac{1}{2}$	$1\frac{1}{4}$	$4\frac{3}{8}$	4	$\frac{7}{8}$

Prob. 3. Draw the two views of a ball bearing post hanger shown in Fig. $110\frac{1}{2}$, adding a top view. Put on all dimensions and a bill of material. Use No. 3 paper

ASSIGNMENT TABLE FOR B. B. POST HANGER

Assign. No.	1	2	3	4	5	6	7	8	9	10
Extension....	8	9	$10\frac{1}{2}$	$10\frac{1}{2}$	$10\frac{1}{2}$	$10\frac{1}{2}$	12	12	12	12
Line No. Table Y, Art. 113..	2	3	5	7	8	9	10	11	12	13

Wall Bracket

Design a wall bracket to hold a pillow block for a $(A)''$ shaft when the distance from bracket support to center of shaft is $(b)''$. The dimensions A and W may be obtained from Art. 104. Make side view, top view, and section on (db) also view from left side. Completely dimension. Use No. 3 paper.

Assignment Table for Wall Bracket

No.	1	2	3	4	5	6	7	8	9	10	11	12	13	14
A	2	$2\frac{1}{2}$	3	$3\frac{1}{2}$	2	$2\frac{1}{2}$	3	$3\frac{1}{2}$	4	$2\frac{1}{4}$	$2\frac{1}{2}$	$2\frac{3}{4}$	3	4
b	16	16	16	16	20	20	20	20	20	25	25	25	25	25

Ball Bearing Hanger

Design a ball bearing hanger for the diameter of shaft ( )$''$ and drop ($''$) as given in Table Y, Art. 113, in line ( ) and column ( ). The dimensions of adapter bearings for this hanger will be found in Table Z, Art. 113, for the proper size of shaft. The number of balls must be calculated from the diameter given and load on bearing. Make a front view (A), left hand in section, a bottom view and a side view (B) left hand in section. Put on all the dimensions and make a bill of material on the drawing. Use No. 3 paper.

Assignment Table for B. B. Hangers (Table Y, Art. 113)

Assign. No.	1	2	3	4	5	6	7	8	9	10	11	12	13	14	15	16
Line No...	2	2	2	4	4	4	6	6	6	8	8	8	10	10	10	12
Column...	*b*	*e*	*g*	*c*	*e*	*g*	*c*	*f*	*h*	*d*	*f*	*h*	*e*	*g*	*i*	*g*

If the assignment number is followed by a (+) take the odd numbered line in the hanger table next in order down the page below the line number given in assignment table, but keep the same column letter as given in the assignment table.

Roller Bearing

Draw the roller bearing pillow block shown in Fig. 115, and calculate the load it will carry safely at 150 R.P.M. of shaft. No. 3 paper.

Prob. 1. Draw a detail of the . . . of the roller bearing pillow block of Fig. 115. No. 2 paper.

Prob. 2. (*a*) Design a roller bearing pillow block to support a $2\frac{1}{2}''$ shaft which carries a load of 4400 lbs. No. 3 paper.

(*b*) Same when shaft diam. $=3''$ and load $=5700$ lbs.

(*c*) Same when shaft diam. $=2\frac{3}{4}''$ and load $=2650$ lbs.

Prob. 3. Calculate the distance apart of the hangers for a (*a*) $2\frac{1}{2}''$ shaft. (*b*) $3''$ shaft. (*c*) $3\frac{1}{2}''$ shaft. (*d*) $2\frac{1}{4}''$ shaft.

CHAPTER X

PISTON AND PISTON RODS

116. A Piston is a cylindrical body fitted within a hollow cylinder so that it can slide in it under pressure and still prevent the escape of the fluid which presses against it.

Examples may be found in steam engines, steam pumps, and gas engines.

The piston is ordinarily fastened to a *piston rod* which passes through a stuffing box in the end of the cylinder in which it slides.

If the piston is provided with valves which allow the fluid to pass through it during one of its strokes, it is called a bucket. When the diameter of the piston is reduced to the diameter of the piston rod or when the piston rod diameter is increased to that of the piston we have what is called a *plunger*. A piston which receives pressure on one side only and which carries a pin passing through one end of the connecting rod is called a *trunk piston*. They are commonly found on internal combustion engines.

117. A plain piston, however well fitted at first, soon would become leaky. To prevent this, it is customary to fit packings to pistons in such a manner that the piston is kept from rubbing against the walls of the cylinder, the wear coming on the packing alone.

A piston should be designed and constructed in such a way that it is sufficiently strong, keeps tight, has few parts, its bolts and nuts are securely fastened, and it works with as little friction as possible.

The simplest piston packing is that which consists of metal rings which are sprung into grooves turned in the circumference of the piston and called Ramsbottom rings. These rings, before springing into place, are slightly larger in diameter than the inside of the cylinder in which the piston is to fit, so that

their tendency to spring back when in place, presses them against the inside surface of the cylinder and makes a tight joint. They are slotted across their circumference to spring them into place.

Fig. 117 shows several cross-sections of pistons in contact with a cylinder wall showing the rings in place. The width of

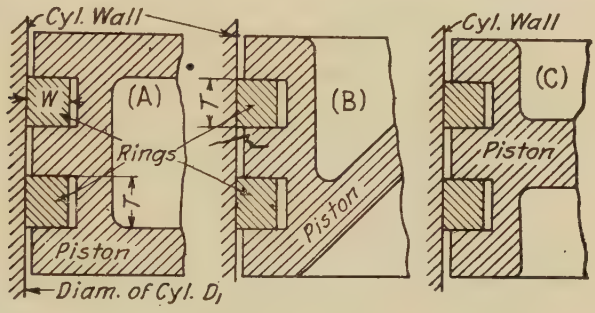

Fig. 117.—Piston Packing Rings.

the rings parallel to the axis of the cylinder may be taken as $T = 0.03D$ to $0.06D$ and their thickness as $W = 0.025D$ to $0.03D$ where D = diameter of piston.

The disadvantage of the spring rings is that it is necessary to remove the piston from the cylinder in order to get at or replace the rings and they cannot be used on large pistons.

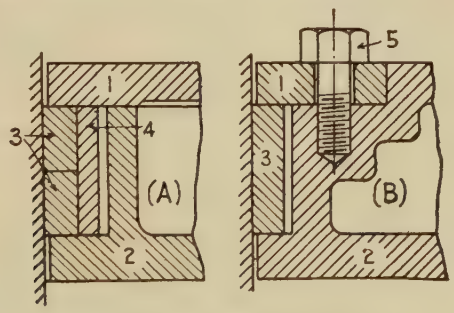

Fig. 118.—Piston Rings.

To overcome these objections the piston is made in two parts as shown in Fig. 118, (2) is the piston body and (1) the follower plate or junk ring. The rings (3) are backed up by other rings

as (4) which press them against the cylinder wall. In (*A*) the follower plate is held against the piston body by the nut on the end of the piston rod. At (*B*) the follower plate is held on by several tap bolts (5).

The follower plate is often called the junk ring.

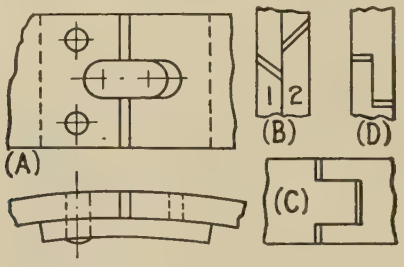

Fig. 119.—Piston Ring Joints.

118. When a single spring ring is used, the joint in the ring, which is necessary to allow it to be sprung into place, must be designed to prevent leakage of steam. A common form of joint

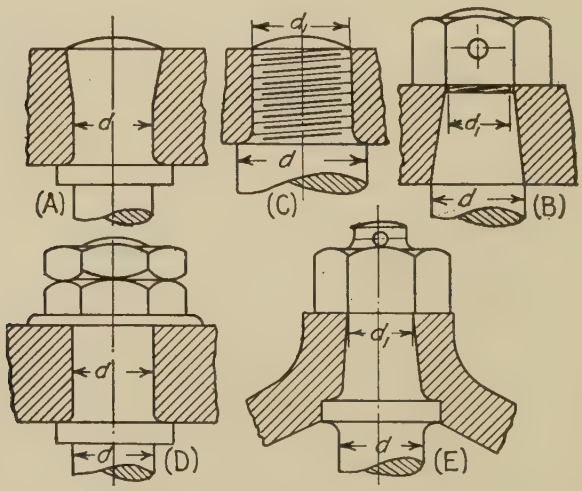

Fig. 120.—Connections of Piston Rods to Pistons.

is shown at (*A*), Fig. 119, where (1) is a tongue fastened to one end of the ring and sliding in a slot in the other end.

At (*B*) is shown the method employed when there are two rings in the packing space. (*C*) is still another method commonly used. (*D*) shows the joint for a small ring.

119. Pistons are fastened to piston rods in a number of ways, the most important being shown in Fig. 120. (*A*) is used on small pistons when it is not necessary to remove the piston from the rod.

The taper of the conical part in (*B*) varies from 1 in 4 to 1 in 7. (*D*) is used when the follower plate is held on by the nut of the piston rod. (*E*) is used on conical steel pistons.

120. Pistons are made either of cast iron or of cast steel, pressed steel, or forged steel. Where lightness is not of special

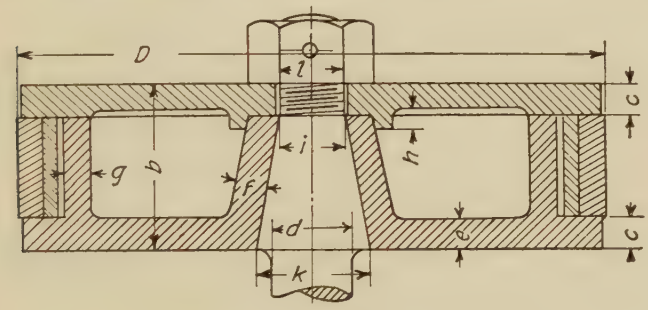

Fig. 121.—C. I. Piston.

importance they are made of cast iron and are cylindrical in form. When lightness is important they are made of cast steel and are conical in shape, as this gives greater strength and rigidity, with 30 to 35% less weight.

Piston rods are made of steel and their strength is calculated at the point of least sectional area, usually at the bottom of the thread. Finer threads than the U. S. Standard are often used in order to keep the diameter of the rod down.

121. The proportions of pistons vary, depending on the class of work and kind of piston. The dimensions of a piston of cast steel, conical in shape, will differ very much from the dimensions of a cast iron piston for a steam pump. In Fig. 121 is shown a form of C. I. piston used on cylinders from 6″ to 16″ diameter and having the dimensions given in the accompanying Table from Haeder and Powell's Hand Book on the Steam Engine.

In this type of piston the junk ring is a sort of cover held in place by the nut on the piston rod.

TABLE FOR C. I. PISTONS UP TO 16" DIAM.

Diam. D of Cyl.	b	c	d	e	f	g	h	i	k	l
6	3	$\frac{1}{2}$	$1\frac{1}{8}$	$\frac{1}{2}$	$\frac{9}{16}$	$\frac{5}{16}$	$\frac{5}{16}$	$1\frac{1}{4}$	$1\frac{3}{4}$	1
8	$3\frac{1}{4}$	$\frac{9}{16}$	$1\frac{3}{8}$	$\frac{1}{2}$	$\frac{5}{8}$	$\frac{3}{8}$	$\frac{5}{16}$	$1\frac{3}{8}$	2	$1\frac{1}{4}$
10	$3\frac{5}{8}$	$\frac{5}{8}$	$1\frac{5}{8}$	$\frac{9}{16}$	$\frac{11}{16}$	$\frac{3}{8}$	$\frac{3}{8}$	$1\frac{5}{8}$	$2\frac{3}{8}$	$1\frac{1}{2}$
12	4	$1\frac{1}{16}$	2	$\frac{5}{8}$	$\frac{3}{4}$	$\frac{1}{2}$	$\frac{3}{8}$	$1\frac{7}{8}$	$2\frac{3}{4}$	$1\frac{7}{8}$
14	$4\frac{1}{2}$	$\frac{3}{4}$	$2\frac{1}{4}$	$\frac{5}{8}$	$\frac{11}{16}$	$\frac{1}{2}$	$\frac{3}{8}$	$2\frac{1}{8}$	$3\frac{1}{4}$	2
16	$4\frac{3}{4}$	$\frac{3}{4}$	$2\frac{3}{8}$	$\frac{11}{16}$	$\frac{7}{8}$	$\frac{1}{2}$	$\frac{3}{8}$	$2\frac{5}{16}$	$3\frac{5}{8}$	$2\frac{1}{4}$

Cast steel pistons conical in form are used in marine engines largely. The piston shown in Fig. 122 and the proportions

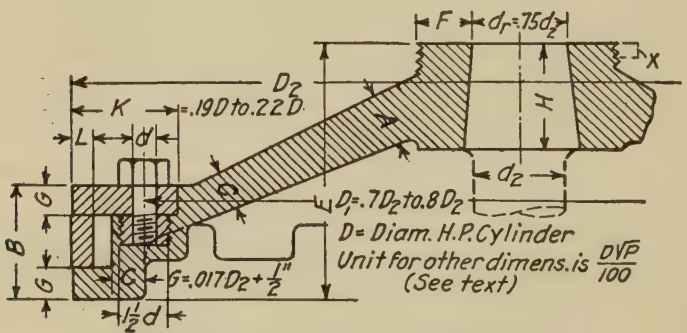

FIG. 122.—Cast Steel Piston.

given are taken from D. A. Low's pocket book and are based on examples from triple expansion marine engines.

The unit for proportions is $\frac{D\sqrt{P}}{100}$, where D is the diam. of high pressure cylinder in inches and P the boiler pressure in lbs. per sq.in. above atmosphere.

$$K = .19D \text{ to } .22D;$$

$$d_r = .75 d_2.$$

Calculate d_2 for the H.P. cyl. and use on the others

$$D_1 = .7D_2 \text{ to } .8D_2;$$

$$L = .039\sqrt{D} + \tfrac{9}{16}'';$$

$$G = .017D + \tfrac{1}{2}''.$$

$$\text{unit} = \frac{D\sqrt{P}}{100} \text{ for the following dimensions:}$$

$A = .48$ unit for H.P. piston; $C = .33$ unit for H.P.;
$A = .54$ unit for I.P. piston; $C = .34$ unit for I.P.;
$A = .64$ unit for L.P. piston; $C = .38$ unit for L.P.;
$B = 1.8$ to 3.1; av. $= 2.2$; $F = .74$ unit.

$E = 3.8$ to 5.4 unit av. $= 4.6$, or such as will make the sloping part of the L.P. piston inclined at 20°. $H = 1.5$ to 2.7, av. $= 1.7$ unit.

The boss may be threaded for a short distance or made with a flange to facilitate the removal of the piston from the cylinder as shown by the dotted lines at x in Fig. 122.

In a compound or triple expansion engine B, E, F, and H are the same for all pistons.

The diameter of the junk ring bolts may be

$$d = .1\left(\frac{D}{50} \times \sqrt{p} + 1\right) + \tfrac{1}{4}'',$$

p in this case is taken as the effective steam pressure, that is, half the boiler pressure for high pressure pistons, quarter boiler pressure for I.P. pistons and the boiler pressure divided by the ratio of low pressure to high pressure piston diameters for L.P. pistons. D = the diameter of the piston.

The pitch of these bolts is from $5d$ to $10d$. They may be tap bolts with heads set in a recess in the junk ring, or projecting from the upper surface of the ring.

Bolts of this kind are usually locked in some manner to prevent working loose and dropping off into the cylinder.

The nuts which are screwed into the piston body to receive the junk ring bolts are kept from turning by taper pin keys. (See Art. 82, Fig. 83 (H).)

122. Piston Rods are made of wrought iron, steel and bronze, their length depending on the stroke of the piston, thickness

of cylinder end, stuffing box depth and kind of crosshead used to guide the end of the rod which works outside the cylinder.

The calculation of the diameter (d) of the rod depends on the unbalanced pressure on the piston, the diameter of the piston and the stress per sq.in. allowed in the metal of the rod. Some writers treat the rod as a long column, but as most rods have a length less than $10d$, the general method appears to be to use a moderate working stress and calculate the area of cross-section from that.

The total pressure on the piston in a cylinder whose diameter is D'' will be the area of the end of the piston times the pressure per sq.in. (p) on it. This can be expressed as $\frac{pD^2\pi}{4}$. The resistance of a piston rod to the pressure on it, due to the piston pressure, will be $\frac{\pi d^2}{4}f$, where d = the rod diameter and f = the strain per sq.in. which the metal is allowed to receive. Equating the load to the resistance gives $\frac{pD^2\pi}{4} = \frac{\pi d^2}{4}f$, from which $d = D\sqrt{\frac{p}{f}}$.

Since the stress in the rod alternates from a pull to a push or from tension to compression, the value of (f) lies between 2000 and 4500, the smaller values being used for long stroke engines.

For marine engines using Siemens-Martin steel rods the value of (f) varies from 2500 in freight steamers to 7000 in small cruisers and torpedo boat destroyers.

The maximum stress in the threaded end of the rod must not exceed 4500 in the first case to 13,000 in the last.

123. The *length of a piston rod* cannot be given arbitrarily on account of the many varied conditions which govern it. If the distance from the under side of the piston to the center of the crosshead pin is given, then the manner of connecting it to both crosshead and piston will determine the shape at each end as well as its length over all. Some of the ways of connecting the piston rod to the piston are shown in Fig. 120. The method of connecting the rod to a crosshead will be found in the chapter following this.

124. Pistons used for internal combustion engines are designed to receive pressure on one end only, and as they take the place of piston rod and crosshead they are open at the end opposite

the pressure end, and contain a wrist pin on which the connecting rod oscillates.

They are made of cast iron or steel, turned slightly smaller at the closed end to allow for expansion when heated by the burning gases and fitted with several Ramsbottom rings to insure tightness during the working stroke.

The wrist pin is placed near the center of length of the piston and is supported by bosses cast on the inside of the piston. The

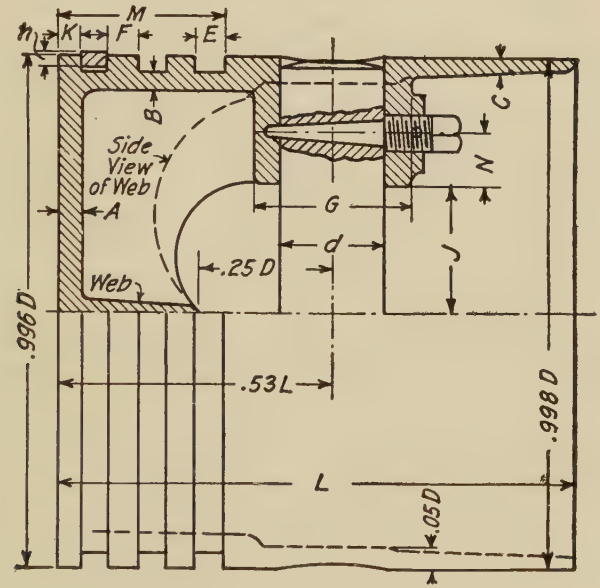

FIG. 123.—Trunk Piston for Gasolene Engine.

length of the piston varies from $L=D$ in small engines to $L=1.5D$. Fig. 123 shows a piston for an engine of the internal combustion type using gasoline as fuel. The dimensions can be obtained from the following formulæ from Louis Lacoin's book on Automobile Motors where $L=D$:

$A=.05D;$	$B=.05D;$	
$h=0.035D;$	$E=0.05D;$	
$K=0.05D;$	$F=0.04D;$	
$M=.4D;$	$d=.2D;$	$G=.3D;$
$J=\frac{1}{4}D;$	$N=.1D;$	$C=.023D.$

For *gas engine* pistons the length L is greater than D, being equal to $1.5D$ to $2D$. Other dimensions differ from those given above for gasolene engine pistons.

The thickness of the flat end of the piston may be taken as $.06D+\frac{1}{4}''$, thickness of sides $=.06D+\frac{1}{8}''$, the length of wrist pin between supporting bosses $=.5D$. The diameter of supporting bosses $=1.5d+\frac{1}{2}''$. The diameter of wrist pin for small engines using a max. piston pressure of

$$\left\{\begin{matrix}350 \text{ lbs. per sq.in.} = 0.16D \\ 450 \text{ lbs. per sq.in.} = 0.21D\end{matrix}\right\} \text{light} \quad \left\{\begin{matrix}\text{to } 0.23D \\ \text{to } 0.3D\end{matrix}\right\} \text{heavy.}$$

To give strength to the piston it should be ribbed on the inside by ribs at right angles extending across the flat end and down the sides nearly to the wrist pin; 5 to 7 Ramsbottom rings are used for packing, the thickness being $\frac{D}{32}$ and width $\frac{3}{8}''$ to $\frac{1}{2}''$ for small engines, $\frac{5}{8}''$ to $\frac{3}{4}''$ for large ones.

125. The weight of a piston in fast running engines has such a great influence on the crank pin pressure that pistons of this kind are made as light as possible. Pressed steel pistons for aeroplane motors are made weighing 1.87 lbs. for a bore of 3.93″ (including the packing rings and wrist pin). As an exercise in estimating weights it is recommended to calculate the weight of one of the foregoing examples of pistons having in view the calculation of weight of all the reciprocating parts of some particular engine for which this piston is suitable.

INSTRUCTIONS

Pistons and Piston Rods

No. 3 paper. Cast iron pistons, 2 hours allowed in class. Av. time required, $2\frac{3}{4}$ hours. Draw a side view (half in section) and an end view from opposite end from piston rod of an $(a)''$ diam. piston suitable for a steam engine cylinder. Use the kind of piston packing rings shown in (c) = Fig. 117 (A), (d) = Fig. 118 (A), (e) = Fig. 118 (B), using the dimensions given in the table for Fig. 121 as far as possible.

When the packing of Fig. 117 is used the junk ring will be omitted and the piston will be hollow with a hole in the top for removing the sand core. The hole is to be threaded and fitted with a plug after-

wards. Dot in piston rod. Give all dimensions. If Fig. 118 (*B*) is used, the nut of the piston rod will press against the top of the hollow piston. The junk ring bolt diameter can be figured from the formula in Art. 121, assuming the boiler pressure as (*P*) lbs. Calculate the pressure per sq.in. on the piston rod. Dot in invisible lines in end view.

Cast Steel Pistons

No. 3 paper. 2 hours allowed in class. Av. time required is $3\frac{3}{4}$ hours. Draw a side view (half in section by plane through axis of piston rod) and an end view of a cast steel piston. Use Fig. 122 as a basis for drawing this piston. The piston is to be (*a*)″ diam. for a (*b*) H.P., (*c*) I.P., (*d*) L.P., cylinder for a (*e*) compound, (*f*) triple exp. steam engine using (*g*) lbs. per sq.in. in the H.P. cylinder. The diameter of the cylinders of this engine are H.P. =( )″, I.P. =( )″, L.P. =( )″. (In a compound the I.P. cylinder is omitted.) Show the piston rod and nut by *dotted lines* and give all dimensions on the drawing. The boss around the piston rod is to be provided with a flange on top for lifting the piston from the cylinder. The packing ring is to be arranged as shown in Fig. 119*A* to prevent leakage past the joint. The steam pressure for triple expansion engine work varies from 160 to 180 lbs. per sq.in. above atmosphere and for compounds from 120 to 150 lbs. Calculate the pressure per unit area of piston rod at root of thread and in the body of rod. Calculate all dimensions before class. Dot invisible lines in end view and give name of piston, for what cyl., and kind of engine.

Internal Combustion Engine Piston

No. 2 paper. (*A*). 2 hours allowed in class. Av. time required is 3 hours. Draw a side view (half in section by a longitudinal cutting plane) and a half end view of the *open* end of a (*a*)″ piston for an internal combustion engine. Show the Ramsbottom rings in place and the wrist pin with the set screw. Use the proportions given in Fig. 123. Give all the dimensions on the drawing. Calculate all dimensions before class.

(*B*) Same views as above in (*A*), but diam. of piston is (*b*)″ and designed for *gas engine* work when the max. piston pressure is (*c*) lbs. Omit the wrist pin in the drawing. Make the length of piston equal to 1.5 its diameter. Put in all invisible lines in end view and any necessary dimensions. Give size of engine in title.

ASSIGNMENT TABLE FOR PISTONS

No.	Cast Iron Pistons (Steam Engines)													
	1	2	3	4	5	6	7	8	9	10	11	12	13	14
a	6	8	10	12	14	16	6	8	10	12	14	16	10	12
	c	*d*	*e*	*d*	*c*	*e*	*d*	*e*	*c*	*e*	*d*	*c*	*d*	*c*
P	90	110	100	90	110	100	115	120	130	110	100	120	120	100
	Cast Steel Pistons (Marine Engines)													
a	10	16	9	$14\frac{1}{2}$	$22\frac{1}{2}$	10	16	25	12	$22\frac{1}{2}$	$18\frac{1}{2}$	$15\frac{1}{2}$	22	15
	b	*d*	*b*	*c*	*d*	*b*	*c*	*d*	*b*	*d*	*b*	*b*	*c*	*b*
	e	*e*	*f*	*f*	*f*	*f*	*f*	*f*	*e*	*e*	*e*	*e*	*f*	*f*
H.P.	10	10	9	9	9	10	10	10	12	12	$18\frac{1}{2}$	$15\frac{1}{2}$	13	15
I.P.	..	..	$14\frac{1}{2}$	$14\frac{1}{2}$	$14\frac{1}{2}$	16	16	16	..	..	..	..	22	$24\frac{1}{2}$
L.P.	16	16	$22\frac{1}{2}$	$22\frac{1}{2}$	$22\frac{1}{2}$	25	25	25	$22\frac{1}{2}$	$22\frac{1}{2}$	$33\frac{1}{2}$	$28\frac{1}{2}$	$33\frac{1}{2}$	33
g	120	120	180	180	180	180	180	180	125	125	150	150	200	180
	Internal Combustion Engine (*A*) (Gasoline), (*B*) Gas													
a	4	$4\frac{1}{2}$	$4\frac{3}{4}$	5	$5\frac{1}{4}$	$5\frac{1}{2}$	$5\frac{3}{4}$	6	$3\frac{3}{4}$	$4\frac{1}{4}$	$4\frac{5}{8}$	$4\frac{7}{8}$	$5\frac{1}{8}$	$4\frac{3}{8}$
b	8	10	12	14	7	9	11	13	15	8	10	12	15	16
c	350	350	350	350	350	350	350	350	350	450	450	450	450	450

Prob. 1. Calculate the stress per sq.in. in the piston rod which fits your piston for the section at root of thread and for the main part of the rod.

Prob. 2. Calculate the pressure per inch of projected area on the wrist pin on (*a*) the part within the bosses and (*b*) the part between the bosses when the pressure on the piston is 350 lbs. per sq.in.

Prob. 3. Calculate the weight of your piston without the piston rod (steam engine).

Prob. 4. Calculate the weight of an internal combustion engine piston with rings and wrist pin (gas and gasoline engine).

CHAPTER XI

CROSSHEADS

126. A CROSSHEAD is that part of a machine which moves in a straight line, with a reciprocating motion, and carries the cylindrical pin on which oscillates one end of a connecting rod.

Steam engines, power pumps, and air compressors are some of the most common machines using crossheads.

Fig. 124 shows the principal parts of a horizontal steam engine: (1) piston, (2) piston rod, (3) crosshead, (4) upper guide

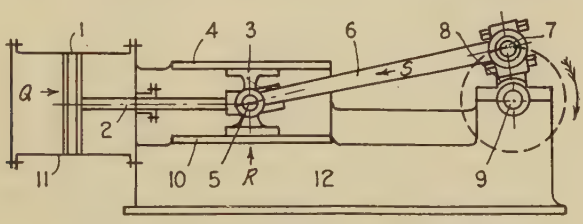

FIG. 124.—Horizontal Steam Engine.

bar, (5) wrist pin, (6) connecting rod, (7) crank pin, (8) crank, (9) crank shaft, (10) lower guide, (11) cylinder, (12) bed.

The crosshead is provided with one or more surfaces which slide in contact with constraining surfaces called *guides*. There may be one, two or four guides, the number serving as an indication of the class to which the crosshead belongs. Stationary engines have two or four guides, while marine engines are usually fitted with slipper guides which comprise two guiding surfaces. The method of fixing the wrist pin in the crosshead and the kind of wrist pin used also help to classify crossheads.

In engines of the type which run "over" (in the direction indicated in Fig. 124), the lower guide bar takes all the downward pressure due to the steam acting on the piston. There is so little pressure ever coming on the upper guide that it is

negligible. The area of the surface of the crosshead in contact with the guides during the forward stroke (away from the cylinder) can be calculated if the following are known; the pressure (R) and the pressure per sq.in (p_1) which the surface is permitted to carry. This latter pressure varies (according to the speed of the crosshead), from 25–100 on stationary engines to 55–120 on marine engines.

127. The calculation of the maximum force (R) acting on the guides depends on the force Q, the length of the connecting rod, the radius of the crank, the diameter of piston, and the steam pressure on the piston. The radius of the crank is, of course, half the stroke.

Let P = steam pressure per sq.in.;
D = diameter of piston in ins.;
L = length of connecting rod in terms of the stroke as nl (l = stroke);

$$Q = P \times \frac{\pi D^2}{4}.$$

The position of the connecting rod which gives the maximum value of (R) is that which occurs when the crank is perpendicular to the line of motion of crosshead, as shown in Fig. 125. The forces acting at the wrist pin are marked Q, R, S, and their values are determined by the relation of the sides of the triangle which is called the force diagram.

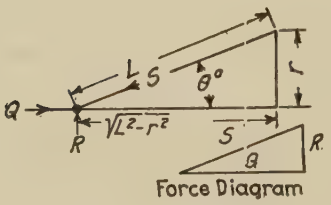

FIG. 125.

That is $Q : R = \sqrt{L^2 - r^2} : r$, or $Qr = R\sqrt{L^2 - r^2}$,

but

$$L = nl \quad \text{and} \quad r = \frac{l}{2}.$$

Therefore

$$\frac{Ql}{2} = R\sqrt{(nl)^2 - \frac{l^2}{4}}.$$

Since

$$Q = \frac{P\pi D^2}{4},$$

we have

$$\frac{P\pi D^2 l}{8} = R\sqrt{n^2 l^2 - \frac{l^2}{4}}.$$

therefore

$$\frac{P\pi D^2}{4} = R\sqrt{4n^2 - 1} \quad \text{and} \quad R = \frac{P\pi D^2}{4\sqrt{4n^2 - 1}}.$$

This value of $(R) \div$ by the value of (p_1) used, depending on the speed of the crosshead, will give the area of the surface of the crosshead in contact with the guide bar below.

If the ratio of the length to the breadth of this surface is assumed, the breadth can be calculated.

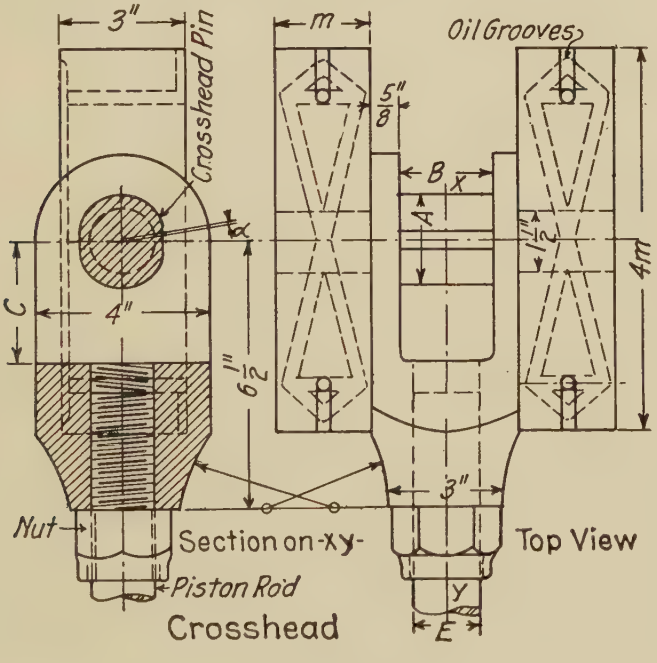

FIG. 126.

In Fig. 126 is shown a crosshead for a small horizontal high speed engine. There are four guides, two above and two below. The bearing surfaces are planes whose total area is $8m^2$. The ratio of length to breadth in this case is 4 : 1. If we calculate

(R) and assume a value of (p_1) we shall have $8m^2 = \frac{R}{p_1}$, from which (m) is easily obtained.

128. The piston rod connection to the crosshead is made either by threading the rod and screwing it into the end of a cylindrical boss on one end of the crosshead (Fig. 126) or by means of a cotter passing through rod and boss. In some cases the piston rod and part of the crosshead are made of one piece, but this is found on small engines as a rule or on engines with slipper crossheads. See Fig. (129).

The proportions of these connections will be found in the various figures.

129. The wrist pin or crosshead pin, or gudgeon pin as the pin is called, which holds the connecting rod to the crosshead, may be made in either of the ways shown in Fig. 127. The

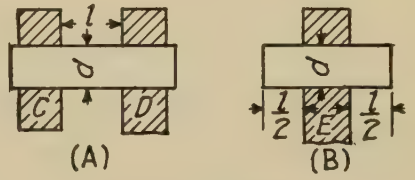

Fig. 127.—Wrist Pins.

pin at (A) is designed to receive the thrust of the connecting rod between the supports (C) and (D) while the pin at (B) projects from a central support (E) and takes the thrust on both sides. In the latter case the connecting rod end must be forked. The diameter of the pin (d) depends on four things, the length (l), the greatest load on the pin, the allowable stress of the material, and the pressure per sq.in. allowed on the bearing surface. If we call (T) the load (f) the stress allowed in the material, (l) the length of the pin and (d) the diam., the following formula will express the diameter of the pin on the basis of strength:

$$d^3 = \frac{1.273Tl}{f},$$

$$d = \sqrt[3]{\frac{1.273Tl}{f}},$$

or if the ratio of l to d is fixed as $\frac{l}{d}$, then

$$d^2=\frac{1.273Tl}{fd}=\frac{1.273T}{f}\times\frac{l}{d},$$

or

$$d=\sqrt{\frac{1.273T}{f}}\times\sqrt{\frac{l}{d}}.$$

If the bearing surface is to be considered, the following requirements must be met: $p\times l\times d=T$, where p=pressure per sq.in. allowed on the bearing. (See Art. 100 and Table 16.)

If $l=xd$ where x is assumed, then $d=\sqrt{\frac{T}{xp}}$, which is the expression generally used for pin diam. If the strength is taken into account and we substitute $l=\frac{T}{dp}$ in the equation for (d) above we get, $d=\sqrt{T}\sqrt[4]{\frac{1.273}{fp}}$. This gives l=about $2d$ to $2.5d$ according to the values assumed for f and p. This, however, is greater than the values convenient to use for this purpose. Values of (x) used in practice vary from 1 to 2. If the pin is wrought iron the value of f is 4500–5000, while for steel it may be taken from 4500–6500. The wrist pin dimensions used in trunk pistons for gas engine work will be found in Art. 124.

The value of T may be obtained from the value of Q given in Art. 127 by multiplying it by the secant of the maximum angle made by the connecting rod with the line of the piston rod called θ, or Q sec. $\theta=T$. θ can be determined if the lengths of connecting rod and crank are known. (See Fig. 125.)

130. A type of crosshead used on an engine with two guide bars is shown in Fig. 128. The guides are bored out to an inside diameter of D'', two shoes are fitted to the crosshead and turned to the same diameter as the guides. The piston rod is fastened to the crosshead by screwing it in. In Fig. 129 is shown a marine type of slipper crosshead taken from Marine Engineering, by Hermann Wilda, in which the piston rod and head are in one forging. The brasses are round in the upper half and square in the lower and are lined with white metal.

TABLE OF DIMENSIONS FOR BORED GUIDE CROSSHEAD, No. 1 (Fig. 128)

Figured for a Working Steam Pressure of 125 Lbs. per sq.in.

Sizes of Cylinders.	Values of the Letters.																	Sizes of Cylinders.
	A	*B*	*C*	*D*	*E*	*F*	*G*	*H*	*I*	*J*	*K*	*L*	*M*	*N*	*O*	*Q*	*R*	*S*	
7–8×8	2	$7\frac{1}{2}$	$4\frac{3}{8}$	$7\frac{1}{2}$	$2\frac{7}{8}$	$3\frac{1}{2}$	$2\frac{1}{8}$	$2\frac{1}{2}$	$\frac{5}{8}$	5	$2\frac{1}{2}$	$2\frac{3}{4}$	$5\frac{3}{4}$	$2\frac{3}{4}$	$1\frac{1}{8}$	$\frac{3}{16}$	$3\frac{3}{4}$	$\frac{5}{16}$	7–8×8
9–10×10	$2\frac{1}{2}$	$9\frac{1}{4}$	$5\frac{1}{2}$	$9\frac{1}{4}$	$3\frac{9}{16}$	$4\frac{3}{8}$	$2\frac{5}{8}$	$3\frac{1}{8}$	$\frac{3}{4}$	$6\frac{1}{8}$	$3\frac{1}{8}$	$3\frac{1}{2}$	$7\frac{1}{8}$	$3\frac{3}{8}$	$1\frac{3}{8}$	$\frac{1}{4}$	$4\frac{5}{8}$	$\frac{3}{8}$	9–10×10
11–12–13×12	3	11	$6\frac{1}{2}$	11	$4\frac{5}{16}$	$5\frac{1}{8}$	$3\frac{1}{8}$	$3\frac{5}{8}$	$\frac{7}{8}$	$7\frac{3}{8}$	$3\frac{3}{4}$	$4\frac{1}{8}$	$8\frac{3}{8}$	$4\frac{1}{8}$	$1\frac{5}{8}$	$\frac{1}{4}$	$5\frac{1}{2}$	$\frac{7}{16}$	11–12–13×12
13–14×14	$3\frac{1}{2}$	$12\frac{3}{4}$	$7\frac{1}{2}$	$12\frac{3}{4}$	5	6	$3\frac{5}{8}$	$4\frac{1}{4}$	1	$8\frac{1}{2}$	$4\frac{3}{8}$	$4\frac{7}{8}$	$9\frac{3}{4}$	$4\frac{7}{8}$	$1\frac{7}{8}$	$\frac{1}{4}$	$6\frac{3}{8}$	$\frac{1}{2}$	13–14×14
15–16×16	4	$14\frac{1}{2}$	$8\frac{1}{2}$	$14\frac{1}{2}$	$5\frac{3}{4}$	$6\frac{7}{8}$	$4\frac{1}{4}$	$4\frac{7}{8}$	$1\frac{1}{8}$	$9\frac{5}{8}$	5	$5\frac{1}{2}$	$11\frac{1}{8}$	$5\frac{1}{2}$	$2\frac{1}{4}$	$\frac{5}{16}$	$7\frac{1}{4}$	$\frac{9}{16}$	15–16×16
17–18×18	$4\frac{1}{2}$	$16\frac{1}{4}$	$9\frac{1}{2}$	$16\frac{1}{4}$	$6\frac{7}{16}$	$7\frac{5}{8}$	$4\frac{3}{4}$	$5\frac{3}{8}$	$1\frac{1}{4}$	$10\frac{7}{8}$	$5\frac{5}{8}$	$6\frac{1}{4}$	$12\frac{3}{8}$	$6\frac{1}{4}$	$2\frac{1}{2}$	$\frac{5}{16}$	$8\frac{1}{8}$	$\frac{5}{8}$	17–18×18
19–20×20	5	18	$10\frac{1}{2}$	18	$7\frac{1}{8}$	$8\frac{1}{2}$	$5\frac{1}{4}$	6	$1\frac{3}{8}$	12	$6\frac{1}{4}$	$6\frac{7}{8}$	$13\frac{3}{4}$	7	$2\frac{3}{4}$	$\frac{5}{16}$	9	$\frac{11}{16}$	19–20×20

Sizes of Cylinders.	Values of the Letters.																Sizes of Cylinders.
	T	*U*	*V*	*W*	*X*	*Y*	*Z*	*AB*	*CD*	*EF*	*GH*	*IJ*	*KL*	*MN*	*OP*	*QR*	*ST*	
7–8×8	$\frac{5}{16}$	$\frac{1}{4}$	$\frac{1}{4}$	$\frac{7}{16}$	$\frac{1}{4}$	$\frac{3}{4}$	$\frac{7}{8}$	2	$1\frac{5}{8}$	$2\frac{1}{8}$	$1\frac{1}{2}$	$5\frac{1}{4}$	$1\frac{3}{8}$	6	$2\frac{1}{2}$	$\frac{1}{2}$	$\frac{1}{2}$	7–8×8
9–10×10	$\frac{3}{8}$	$\frac{5}{16}$	$\frac{5}{16}$	$\frac{1}{2}$	$\frac{5}{16}$	$\frac{15}{16}$	$1\frac{1}{8}$	$2\frac{1}{2}$	2	$2\frac{5}{8}$	$1\frac{7}{8}$	$6\frac{3}{8}$	$1\frac{3}{4}$	$7\frac{1}{2}$	3	$\frac{9}{16}$	$\frac{9}{16}$	9–10×10
11–12–13×12	$\frac{7}{16}$	$\frac{3}{8}$	$\frac{3}{8}$	$\frac{5}{8}$	$\frac{3}{8}$	$1\frac{1}{8}$	$1\frac{3}{8}$	3	$2\frac{3}{8}$	$3\frac{1}{4}$	$2\frac{1}{4}$	$7\frac{5}{8}$	$2\frac{1}{8}$	9	$3\frac{5}{8}$	$\frac{5}{8}$	$\frac{5}{8}$	11–12–13×12
13–14×14	$\frac{1}{2}$	$\frac{7}{16}$	$\frac{7}{16}$	$\frac{3}{4}$	$\frac{7}{16}$	$1\frac{5}{16}$	$1\frac{5}{8}$	$3\frac{1}{2}$	$2\frac{3}{4}$	$3\frac{3}{4}$	$2\frac{5}{8}$	9	$2\frac{3}{8}$	$10\frac{1}{2}$	$4\frac{1}{8}$	$\frac{3}{4}$	$\frac{3}{4}$	13–14×14
15–16×16	$\frac{5}{8}$	$\frac{1}{2}$	$\frac{1}{2}$	$\frac{7}{8}$	$\frac{1}{2}$	$1\frac{1}{2}$	$1\frac{7}{8}$	4	$3\frac{1}{4}$	$4\frac{1}{4}$	3	$10\frac{3}{8}$	$2\frac{3}{4}$	12	$4\frac{7}{8}$	$\frac{3}{4}$	$\frac{7}{8}$	15–16×16
17–18×18	$\frac{11}{16}$	$\frac{9}{16}$	$\frac{9}{16}$	1	$\frac{9}{16}$	$1\frac{11}{16}$	$2\frac{1}{8}$	$4\frac{1}{2}$	$3\frac{5}{8}$	$4\frac{7}{8}$	$3\frac{3}{8}$	$11\frac{3}{4}$	3	$13\frac{1}{2}$	$5\frac{3}{8}$	$\frac{7}{8}$	1	17–18×18
19–20×20	$\frac{3}{4}$	$\frac{5}{8}$	$\frac{5}{8}$	$1\frac{1}{8}$	$\frac{5}{8}$	$1\frac{7}{8}$	$2\frac{3}{8}$	5	4	$5\frac{3}{8}$	$3\frac{3}{4}$	13	$3\frac{3}{8}$	15	6	1	$1\frac{1}{8}$	19–20×20

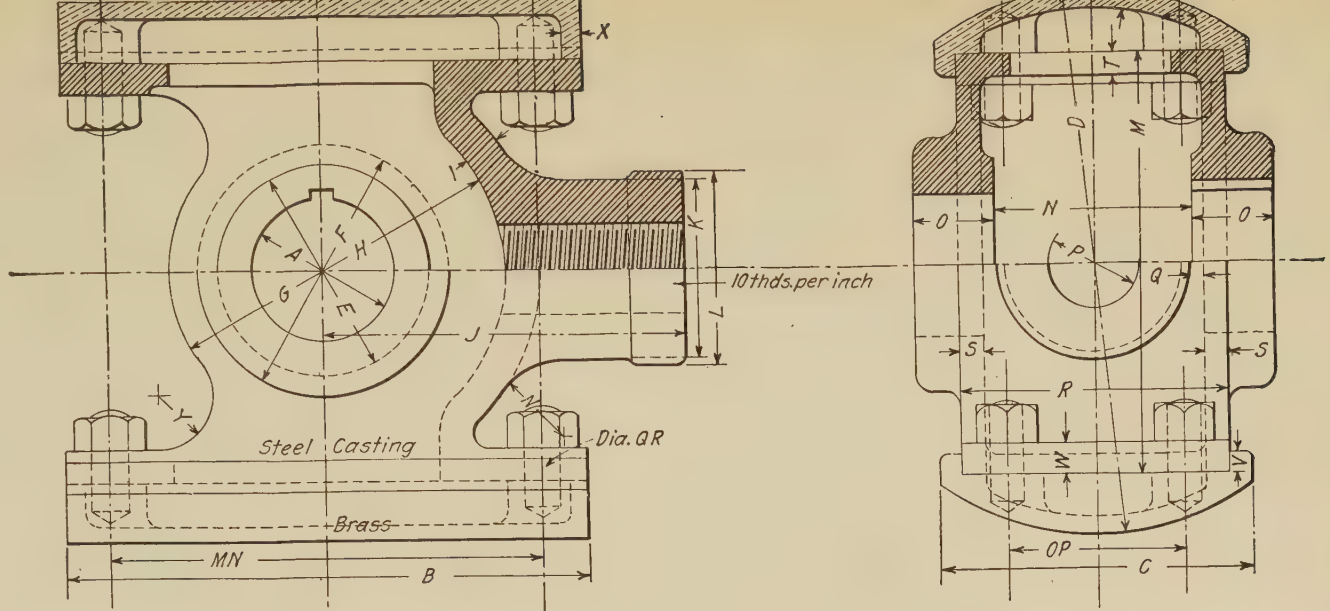
X
A
B
C
D
E
F
G
H
J
K
L
M
N
O
P
Q
R
S
T
U
V
W
Y
10 thds. per inch
Steel Casting
Dia. QR
Brass
MN
B
OP
C

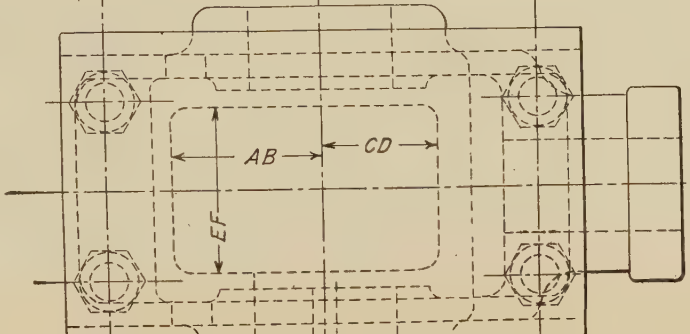
AB
CD
EF

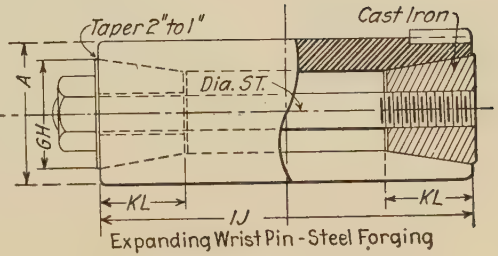
Taper 2" to 1"
Cast Iron
Dia. ST.
A
GH
KL
KL
IJ
Expanding Wrist Pin - Steel Forging

The proportions given are in terms of (d) the diameter of the crosshead pin. This is for engines of large power.

m = not less than $1.6d$, $u = .4$ to $.5d$, $T = .5d$ to $.55d$.

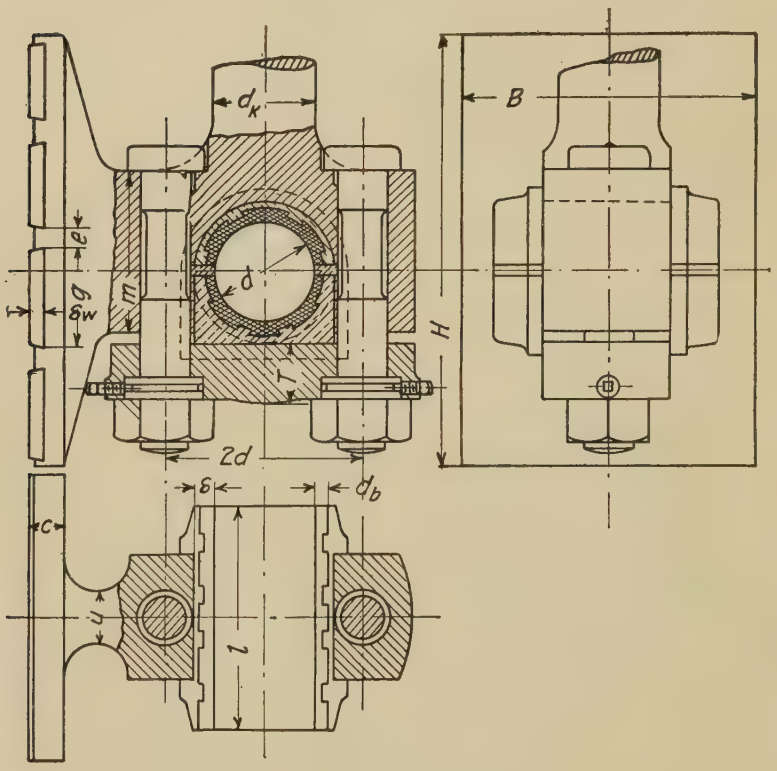

Fig. 129.—Slipper Crosshead.

diam. of bolts determined from

f = 4300 to 5000 lbs. per sq.in. for W.I.
= 6400 to 7100 lbs. per sq.in. for steel.

Distance between bolt centers = $2d$.

Make the body of the bolts the same diameter as the root of thread of the bolts, but use a finer pitch thread than the standard.

Thickness of brasses $\delta = .03d + \frac{3}{16}''$.

$H = 3.5d_k$ to $4.5d_k$; $C = .98''$ to $3\frac{1}{8}''$;

$g = 2\frac{3}{4}''$ to $5\frac{1}{2}''$; $e = .6''$ to $1\frac{3}{8}''$;

$\delta_w = .4''$ to $\frac{5}{8}''$; $l = d$ to $2d$.

$B = 2.5d_k$ to $2.9d_k$;

Calculate piston rod diameter for 5000 lbs. per sq.in. when load on rod is half that given as per table of assignments.

$$d_k = 1.07D\sqrt{\frac{p}{k_z}};$$

p = unbalanced working steam pressure in lbs. per sq.in.;

D = diam. of cyl. of engine;

k_z = 4300 to 7000 lbs. per sq.in.

INSTRUCTIONS

Crossheads

Example 1. No. 3 paper; 4 hours allowed in class. Av. time required is 4.35 hours. Draw a crosshead like the one shown in Fig. 126, adding to the views there shown a third view looking at the top view from the end containing the piston rod. Calculate the value of (m) when the steam pressure in the cyl. is 100 lbs. per sq in. Engine cyl. is $9\frac{1}{2}''$ diam. Stroke of engine = $12''$. Conn. rod length = 3 × stroke. Max. Pressure on bearing surfaces of crosshead is 25 lbs. per sq.in. Calculate (A) and (B) when $B = 1.24A$ and the max. bearing pressure on the pin is to be 1180 lbs. per inch of projected area. C is to be made large enough to allow the strap of the connecting rod to clear by $\frac{1}{2}''$. (See Fig. 137.) The oil grooves may be taken not larger than $\frac{3}{16}''$ wide witha semi-circular cross-section. E may be calculated from the diam. of the engine cyl. and steam press. by allowing a tensile strain of 4700 lbs. per sq.in. at the root of thread and using 8 threads per in. on the threaded portion. The locknut is a standard nut across flats and the depth of the hex. part is standard. The sleeve of the nut protects the threads on the

piston rod and is made about $\frac{E}{2}$ high above the hex. The other end of the piston rod is to be shown, the connection to the piston being of the kind shown in Fig. 120 (*A*). Thickness of piston $= 4\frac{3}{4}''$. It is advisable to break the rod between the crosshead and piston and omit the long cylindrical portion on the drawing. The total length can be indicated by a dimension line only. Calculate the strain on the crosshead pin, using the formula in Art. 129. Pl. can be traced in 3.25 hours. Av. time required is 6 hours for complete plate.

Prob. 1. No. 3 paper. 4 hours allowed in class. Av. time required is 6 hours. Draw to scale and dimension carefully the crosshead shown in Fig. 128, 3 views; bottom view to be a half sec. above center line. This will be calculated for an engine (Bore =), Stroke = . Length of connecting rod = 3 × stroke. Steam at 125 lbs. pressure. Find the pressure per inch of bearing surface of shoe. Calculate the diam. at root of threads on piston rod for a unit stress = 4500 lbs. per sq.in. Use 10 threads per inch for threading piston rod. Find the press. per sq.in. of projected area of wrist pin. Calculate the unit stress in the wrist pin from the formulæ in Art. 129. Make a note on the drawing giving all the above information, as

Steam pressure in cyl. = 125 lbs. per sq.in.
Max. press. on shoe = 000 lbs. per sq.in.
Unit stress in piston rod = 000 lbs. per sq.in.
Pressure per sq.in. of projected area of wrist pin = > < lbs.
Unit stress in wrist pin = 000 lbs. per sq.in.
Title to be "Crosshead for 00 × 00 Engine."
Assignment table for sizes is given below.

Assignment Table (Prob. 1)

No.	1	2	3	4	5	6	7	8	9	10	11	12	13	14	15
Bore....	7	8	9	10	11	12	13	13	14	15	16	17	18	19	20
Stroke ..	8	8	10	10	12	12	12	14	14	16	16	18	18	20	20

Other dimensions will be found in the Table on page 166 in Art. 130.

Prob. 2. No. 3 paper. 4 hours allowed on class. Av. time required is 7.1 hours. Draw to scale and dimension carefully three views of a slipper crosshead for a marine engine (Fig. 129) whose cyl. diam. = ", stroke = ", steam pressure lbs. per sq.in. In the side view show a section on the side towards the slipper and an outside view to the

right of the center line. Make a half section and half outside view of each of the other views. Length of connecting rod $= 2\frac{1}{2}$ times stroke. Find the pressure per sq.in. of projected area of wrist pin. Find the pressure per sq.in. on the rubbing surface of slipper. Make a note on the drawing giving the data used and the results obtained in the above calculations. Title to be "Crosshead for × Marine Engine."

Assignment Table follows.

ASSIGNMENTS FOR PROB. 2

No.	1	2	3	4	5	6	7	8	9	10
Bore.....	$12\frac{1}{4}$	11	$14\frac{1}{2}$	14	15	16	17	17	19	21
Stroke.....	$17\frac{3}{4}$	22	24	24	27	30	24	27	39	36
Steam.....	160	160	160	160	150	160	150	120	160	160

Use half the given steam pressure in calculating d_k, d and bolt diameter. Use $l = 2\frac{1}{4}d$ and 1000 lbs. per inch of projected area of wrist pin. For bolts use $f = 5500$ lbs. and make the thread 10 or 12 pitch. Use maximum values of constants in working out (B) and (H). Use minimum values for (g) and (c). Put 3 to 5 sections of babbitt in the shoe-bearing surface.

No. 6 Test. Arts. 116–130. (2 hours allowed.)

1. (a) What is a piston? (b) How is leakage past it prevented? (c) Sketch two ways of fastening a piston to a piston rod. (d) What is a trunk piston and where is it used?

2. A gasoline engine has 4″ bore, 6″ stroke, length of connecting rod $= 2\frac{1}{2}$ times stroke. The piston length equals its diameter. The wrist pin diameter $= 0.2D$, and its length between supports is $\frac{1}{2}D$. If the explosion pressure in the cyl. is 300 lbs. per sq.in. calculate (a) the max. thrust of the piston against the cyl. walls (in lbs. per inch of projected piston bearing area). Calculate (b) the pressure per inch of projected area on the wrist pin.

3. A piston rod $1\frac{3}{4}$″ diam. is screwed into a crosshead by being threaded with 10 thds. p.i. (depth of thd. $= .065$″). What steam pressure can be used if the piston diameter is 10″ and the max. unit stress in the rod is not to exceed 4500 lbs. per sq.in.? What will be the unit stress in the unthreaded portion of the rod?

4. What area of crosshead bearing surface will you allow in Question 3 if the pressure on the guides is 30 lbs. per sq.in.? (Length of conn. rod $= 4$ times the stroke, which is 12″.)

No. 7 Test. Arts. 116–130. (2 hours allowed.)

1. Describe in detail (*a*) the various forms of pistons, (*b*) how they are fastened to the piston rods, and the (*c*) methods of keeping them tight. (*d*) What is the function of a wrist pin?

2. An engine has a cyl. bore of 10″ and a stroke of 12″. The connecting rod length is $2\frac{1}{2}$ times the stroke. The piston rod is 2″ diam. threaded 10 thds. p. i. (depth of thread = .065″). The crosshead bearing surfaces have an area of 60 sq.in. When these surfaces are carrying a max. pressure of 30 lbs. per sq.in. calculate (*a*) the steam pressure in the cyl., (*b*) the unit stress in the piston rod at least section, (*c*) the diameter and length of the wrist pin ($l = 2d$) when the max. pressure per in. of projected area is 1000 lbs.

3. A gasoline engine is $4\frac{1}{4}$″ bore × 6″ stroke and the connecting rod is 15″ long. The length of piston = its diam. Find (*a*) the max. pressure of the piston against the cyl. wall when the explosion pressure = 350 lbs. per sq.in. (*b*) Find the pressure per sq.in. of projected area of wrist pin when the pin diam. = .2D and its length is 0.5D.

CHAPTER XII

CONNECTING RODS

131. A CONNECTING rod is a link used to connect two machine parts whose motions are different in character. A part moving with reciprocating motion may thus be connected to a part having circular motion; an example of this is found in the connection between the crosshead pin and the crank pin of a steam engine. (See Fig. 124.) The *length* of a connecting rod is the distance between the centers of the pins which it connects. In engine or pump connecting rods this length is usually a multiple of the length of movement of the piston or plunger in one direction. This movement is called the *stroke* of the engine or pump. The length of connecting rod varies from 2 to 4 times the stroke on land engines to $1\frac{3}{4}$ to $2\frac{1}{2}$ times the stroke on marine engines. In gas engines the length of rod is from 2 to 4 times the stroke.

132. A connecting rod has each end shaped to receive a pin in much the same manner that a bearing receives a rotating shaft except that in the latter case the shaft rotates while the bearing is fixed. The pressure on the bearing surfaces of the pins in a connecting rod is used to determine the size of these pins and consequently the size of the ends of the rod. The size of the pin at the end of the rod having reciprocating motion and called the *wrist* or *crosshead* pin can be found by reference to Art. 124, Fig. 123, for gas engines, and Art. 129 for steam engines. The end of the connecting rod turning on the wrist pin is called the *little end* or *crosshead end* while the other end is the crank end or big end.

The crank pin dimensions may be determined by reference to Art. 142 and Table 16. When the diameters and lengths of the pins have been determined for each end and the length of the rod from c. to c. of pins, it will then be necessary to find the area of the least transverse section of the rod. The point of least sectional area is near the crosshead end of the rod. The

shape of the section at this point may be a circle, a rectangle with the longer side parallel to the plane of motion of the rod, or an I section with the web parallel to this plane. See Fig. 130.

133. The calculation of *this* section as well as other sections nearer the crank pin requires an extended knowledge of mechanics, therefore it has been considered advisable to give empirical formulæ which will give results close enough for drawing purposes.

The size of the least section depends on the pressure on the rod due to the working fluid in the cylinder as well as the strain on the rod due to the speed at which it runs.

The maximum push or pull on the rod may be found by reference to Arts. 127, 129 and Fig. 125.

In gas and gasoline engine work the dimensions of the rod at the wrist pin end may be calculated from the following formulæ. For a circular section from Prof. Lucke the diameter

$$d = .011D\sqrt{p} \text{ to } 0.014D\sqrt{p},$$

D = diam. of cyl. and (p) = initial press. per sq.in. (say 350).

For plain rectangular rods the thickness (t) is $0.008D\sqrt{p}$ and the width b at the piston end is $1.6t$. At the crank end the width b is $2.3t$. If the section is of the I shape the width of flanges may be $1.3t$ as found above, and the web thickness $(S) = 0.6t$. For steam engines the diam. (d) at a point .4 the length of the rod from the crank end may be $d = 0.0164\sqrt[4]{mPl^2}$, where P = total unbalanced pressure on piston, l = length of rod in inches and (m) has the following values:

Piston speed ft. per min.,	200	400	600	800
m	30	20	15	10

The diameter at the small end $= .9d$; at the large end, $1.1d$.

For rectangular rods of breadth (b) and thickness (t) see Fig. 130 (B) and (C). Haeder and Powles give the following:

(When $b = xt$ (x varies from $1\frac{1}{2}$ to $2\frac{1}{2}$), $t = 0.0144\sqrt[4]{Tl^2}\sqrt[4]{\frac{m}{x}}$,

T = thrust on rod. (See Fig. 125 where it is denoted by S.)

134. The crank pin being larger than the wrist pin the connecting rod increases in size towards the large end by a straight taper, when made of rectangular or I section.

If the section is circular the rod may increase its diameter towards the middle and then decrease to the large end or the circular section may change to a section at the large end almost rectangular in shape.

Rods of I section vary the depth of web (d) but keep the flange width (b) and web thickness S constant from end to end.

Cross sections of rods are made in the shapes shown in Fig. 130.

(A) is used for slow speed steam engines and small gasoline engines.

(B) and (C) are used on high speed steam engines and (D) for gasoline engines.

(A) and (B) are often combined on the same rod, (A) at the small end, and (B) at the crank end, the whole rod being turned conical in a lathe and the parallel sides milled off to make a constant thickness (d) = (t) from one end to the other.

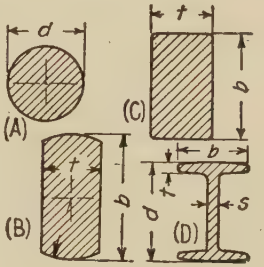

FIG. 130.—Cross-Sections of Connecting Rods.

135. The simplest connection of rod end to pin is a cylindrical hole in the end of the rod through which the pin passes.

This joint does not provide for wear unless the rod is bushed. The wrist pin ends of small gasoline engine connecting rods are made in this manner. Fig. 131. The other end of this rod is made adjustable by the cap and screws. The proportions of such rods are given by the following formulæ, which are suitable for rods for gasoline engines of small size (Heldt-Gasolene Automobile):

$$S=\sqrt{\sqrt{0.0000000000115P^2+0.000000000866Pl^2}+0.0000034P}.$$

P = total explosion pressure on piston, l = length of rod in inches, b = width of flange = $3.8S$, depth of rod = $5.7S$, $t=S$, $a=1\frac{1}{4}d$, d = wrist pin diam. (see Art. 124), thickness of bushing at big end = $\frac{1}{10}d_2$, d_2 = crank pin diam., bolts are $\frac{3}{8}''$ A.L.A.M. thread, $l_2=d_2$ to $1.3d_2$, a = outside diam. of bushing on small end.

Letters refer to Fig. 130 and Fig. 131.

Four bolts are used in the crank end if there is room. Use 800 lbs. per sq.in. on projected bearing surface of crank pin when the explosion pressure in the cylinder is 300 lbs. per sq.in.

136. The crank end of a connecting rod for marine engines and for some land engines is often made of the type shown in Fig. 132, which is called the " marine " type. The end of the rod is forked and fitted to a cap by means of two through bolts furnished with two nuts to prevent working loose. A Penn nut with set screw may be used instead of a single nut with a split cotter pin passing through the end of the bolt. In order to prevent the cap brass from being pressed too tightly against the crank pin, when the nuts are screwed on these bolts, two

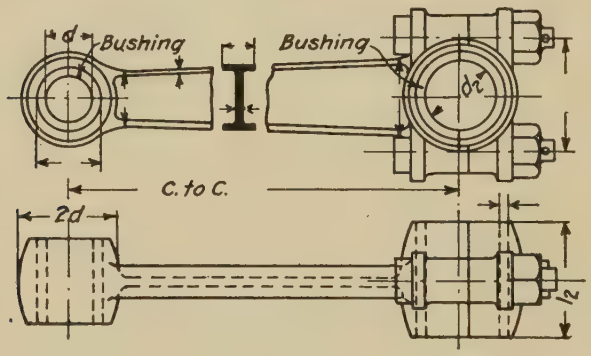

Fig. 131.—Connecting Rod for Gasolene Engine.

" shims " are placed between the adjacent surface of cap and rod end. If adjustment of bearing is desired these shims are taken out and made thinner by filing or scraping. Instead of a single thickness as shown, the shim may consist of several thin sheets of metal. To prevent the shims from dropping out of place before the nuts are tightened each one is held by two dowel pins which are inserted in the cap and extend into holes in the shim half way through it although the holes are drilled entirely through the shim. The brasses are prevented from rotating inside the cap and rod end by having the bolts pass through grooves in the sides. The cap is prevented from loosening by locknuts placed above regular nuts or by two nuts equal in thickness on the bolt ends. The heads of the bolts are placed so close to the rod that they cannot turn while the nuts are

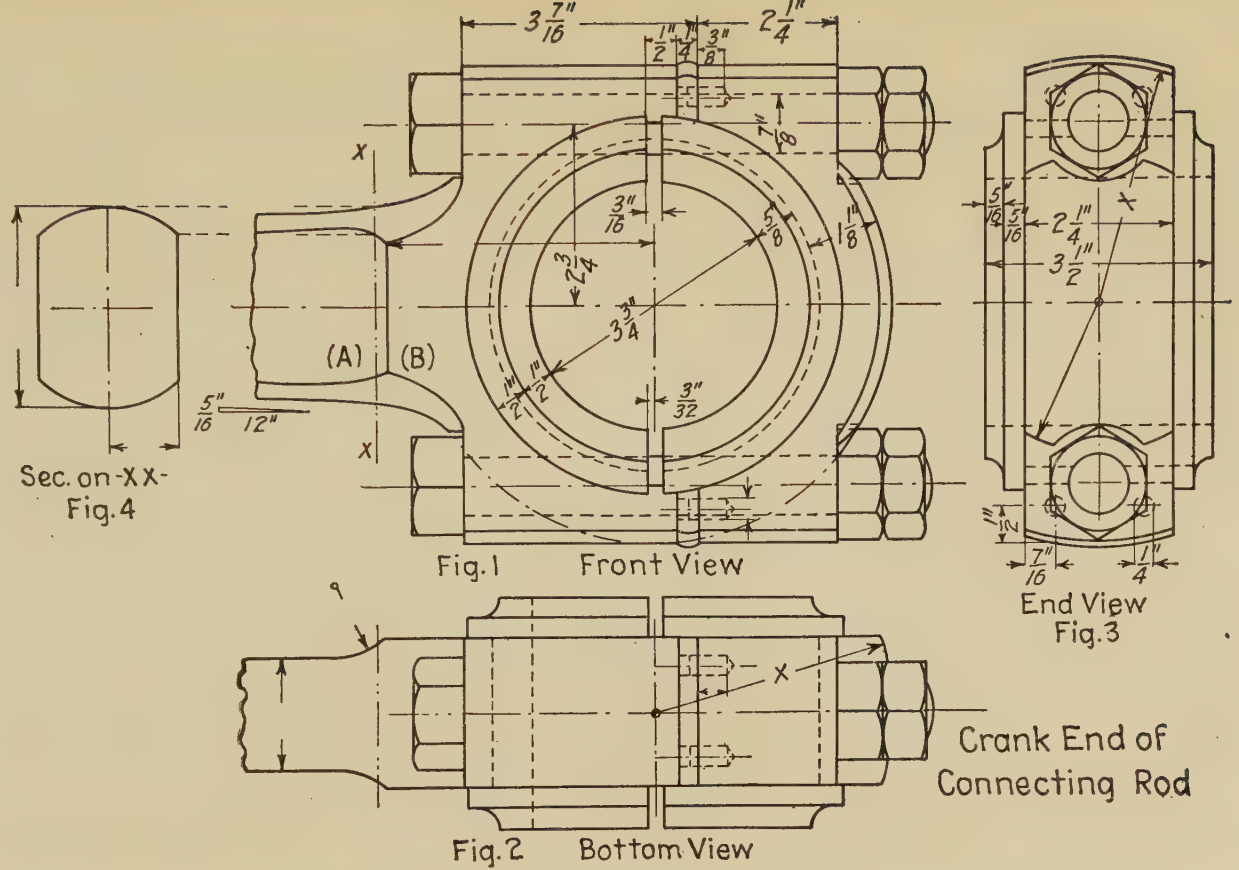
Sec. on -XX-
Fig. 4
Fig. 1 Front View
End View
Fig. 3
Fig. 2 Bottom View
Crank End of
Connecting Rod

FIG. 132.

being screwed on. The rod and the rod end as well as the cap are designed to be turned in a lathe. The curves at (*A*) and (*B*) of Fig. 1 are plotted as the intersections, (*A*) of a surface of revolution with a cylindrical surface and (*B*) with a plane similar to the curve on the strap end. The other curves on the cap in Fig. 1 and Fig. 3 are circles or arcs or circles, one view giving the radii for the curves of the other. In Fig. 1 the width of the end of the rod may be found from the known length c. to c., the taper of each side and the diameter at the strap end where this taper begins. The curves which join the sloping sides of the rod to the forked end through which the bolts pass, may be drawn with a curved ruler. The horizontal dimension indicated but not given in Fig. 1, just above the horizontal

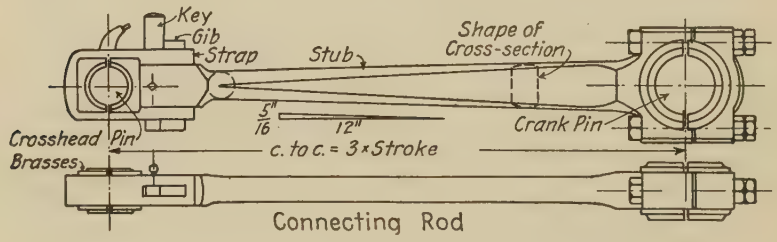

Fig. 133.

center line, may be assumed to bring the vertical straight line, to the right of *xx*, to the left of the bolt heads. In Fig. 2 the radius of the curve joining the stub to the head is also to be assumed. This rod end was designed for a connecting rod to be used on a $9\frac{1}{2}'' \times 12''$ horizontal engine to run at 275 R.P.M.

The entire rod is shown in Fig. 133. The stroke of the engine being 12″ the length of rod c. to c. is easily found.

137. Another type of marine end is shown in Fig. 134. The dimensions for several sizes will be found in the table on page 179. The length c. to c. may be taken as 3×stroke of engine given, which is the last number in the first or last columns.

138. Solid Ends are used on crank pins of the *overhung* type, that is, a pin supported at one end only. These ends are lighter than other forms and are also less liable to breakdowns. The end is forged solid and the rectangular hole is then cut out having rounded corners. Fig. 135 shows the general form of these ends. The adjustment is obtained by a wedge actuated

Tables of Dimensions for Rod Designs

Steam Pressure = 125 Lbs.

Sizes of Cylinders.	Values of Letters on Figure 134 (marine end).																Sizes of Cylinders.
	B	*D*	*F*	*G*	*J*	*K*	*L*	*M*	*N*	*R*	*T*	*U*	*W*	*CD*	*GH*	*IJ*	
7–8×10	3¾	5½	⅜	7¼	1⅜	2½	2¾	3	4	3½	1¾	3¼	¾	5½	⅞	1	7–8×10
9–10×10	4½	6⅝	7/16	8¾	1 11/16	2¾	3 5/16	3⅝	4⅞	4¼	2⅛	4	15/16	6⅝	1⅛	1¼	9–10×10
11–12–13×12	5½	7¾	½	10¼	2	3¼	3⅞	4	5¾	5	2½	4¾	1⅛	7⅞	1¼	1⅜	11–12–13×12
13–14×14	6¼	8⅞	½	11¾	2⅜	3¾	4½	5	6⅝	5¾	2⅞	5½	1 5/16	9	1½	1⅝	13–14×14
15–16×16	7¼	10	9/16	13¼	2 11/16	4¼	5	5⅝	7½	6½	3¼	6¼	1½	10⅛	1¾	1⅞	15–16×16
17–18×18	8	11	⅝	14¾	3	4¾	5⅜	6¼	8¼	7¼	3⅝	7	1 11/16	11⅜	1⅞	2	17–18×18
19–20×20	9	12¼	11/16	16½	3⅜	5¼	6¼	6⅞	9½	8	4	7¾	1⅞	12½	2⅛	2¼	19–20×20

Sizes of Cylinders.	Values of Letters on Figure 135 (solid end).																		Sizes of Cylinders.
	B	*D*	*F*	*G*	*I*	*K*	*L*	*M*	*Q*	*S*	*U*	*V*	*W*	*X*	*Y*	*Z*	*AB*	*KL*	
7–8×10	2½	3¾	¼	4⅜	3¼	4⅛	4	3⅞	2½	2½	1⅝	¾	2 7/16	2 15/16	3 5/16	2½	5/16	9/16	7–8×10
9–10×12	3	5	5/16	5¼	3⅞	5	4⅞	4 11/16	3	3	2	15/16	3	3 9/16	4	3	⅜	⅝	9–10×12
11–12–13×15	3⅝	5⅜	⅜	6⅜	4¾	6	5⅞	5½	3⅝	3⅝	2⅜	1⅛	3 9/16	4 3/16	4 11/16	3 9/16	7/16	¾	11–12–13×15
13–14×18	4¼	6¼	7/16	7½	5⅝	7 1/16	6⅞	6 7/16	4¼	4¼	2¾	1 5/16	4¼	4 15/16	5 9/16	4 3/16	½	⅞	13–14×18
15–16×20	4⅞	7⅛	½	8½	6⅜	8	7⅞	7⅛	4⅞	4⅞	3⅛	1½	4¾	5 7/16	6⅛	4 11/16	9/16	⅞	15–16×20
17–18×22	5⅜	7⅞	9/16	9½	7⅛	8⅞	8⅝	8	5⅜	5⅜	3½	1 11/16	5⅜	5¾	6 13/16	5 3/16	⅝	1	17–18×22
19–20×24	6	8¾	⅝	10½	8	9¾	9⅝	8⅝	6	6	3⅞	1⅞	6	6½	7⅜	5 11/16	11/16	1	19–20×24

by two bolts. Dimensions are given in the table on page 179 for these ends.

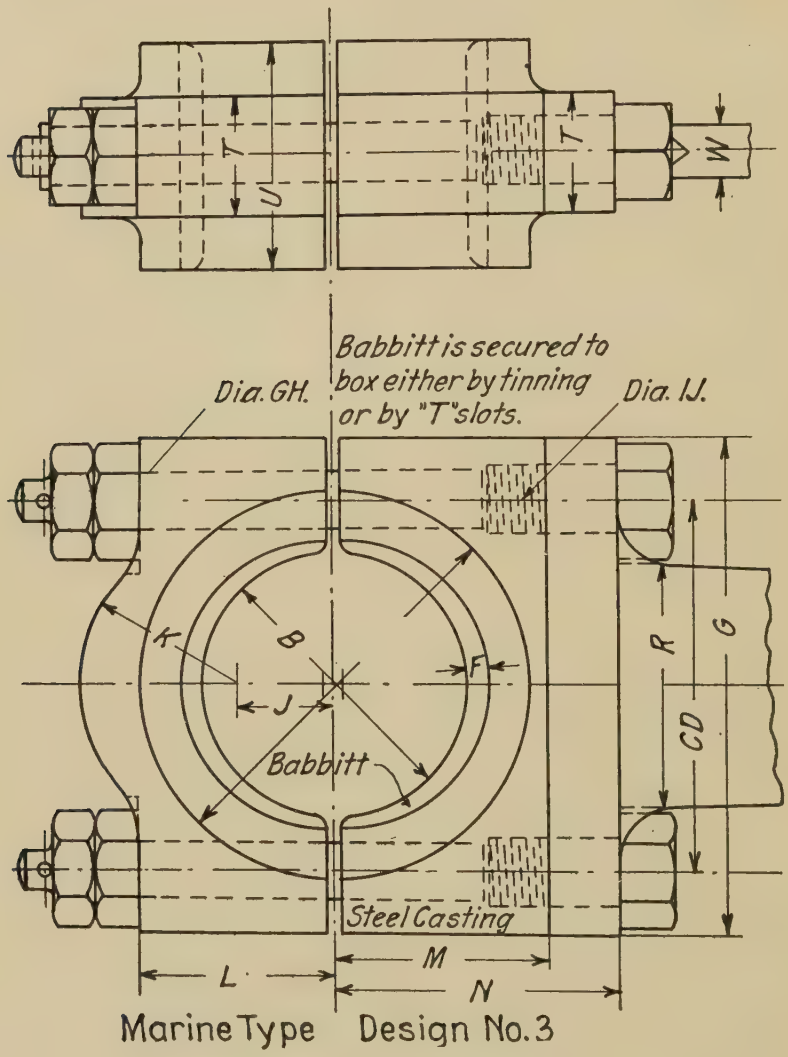

Fig. 134.—Connecting Rod End.

139. The little end of a connecting rod is usually made of a type called a *strap* end.

Reference to Fig. 133 will make clear the parts which compose it. The end of the rod itself is made rectangular and with a hole to take a gib and cotter. The brasses are made

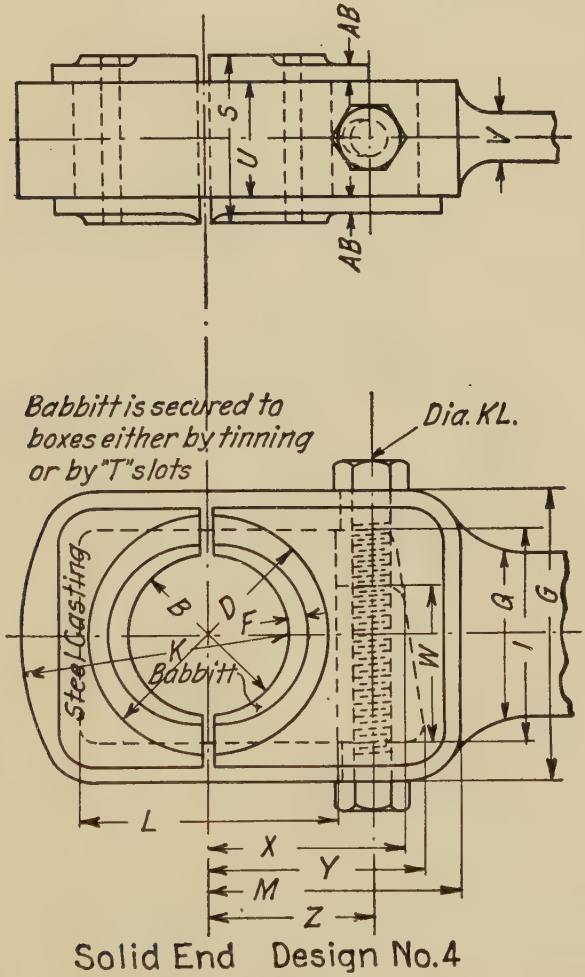

FIG. 135.—Connecting Rod End.

rectangular to fit, one against the rod end and one against the strap. A strap is fitted around the brasses and cotter slots in it match the slot in the rod end. The set screw prevents the

cotter from slacking back, and its point bears in a groove cut in the side of the cotter. If the diameter of the wrist pin is known the dimensions of the parts may be proportioned from the following formulæ which refer to Fig. 136. (Low & Bevis, Mach. Dr. and Design.)

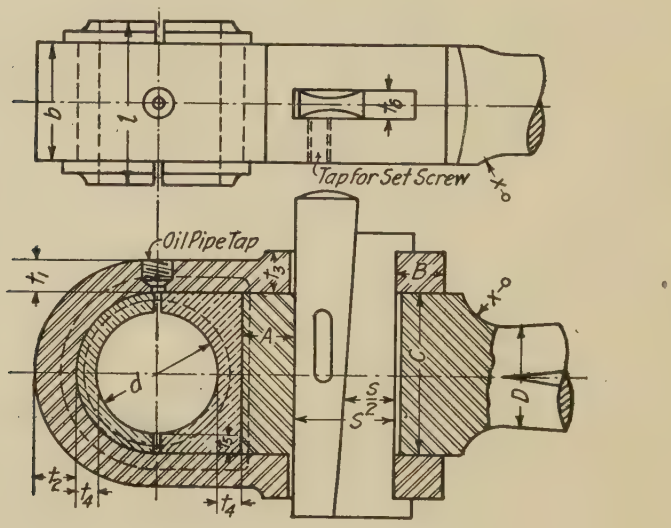

FIG. 136.—Connecting Rod End.

$b = D + \frac{1}{4}''$ to $\frac{3}{4}''$; $t_6 = \frac{b}{4}$ or $\frac{b}{3}$;

$2bt_1$ = area of circle D'' diam.;

$t_1 = \frac{\text{area of } D}{2b}$; $t_2 = 1.17t_1$ to $1.5t_1$;

$t_3 = 1.2t_1$ to $1.5t_1$ or such that area through cotter hole $\geq bt_1$. Area of cross-section of cotter and gib $\geq bt_1$;

$t_3 = 1.33t_1$; $A = \frac{2}{3}\frac{\text{area } D}{C}$; $B = \frac{\text{area of } D}{3t_3}$;

$t_4 = \frac{1}{8}d + \frac{1}{4}''$; $t_5 = .5t$ to t.

$t = .08d + \frac{1}{10}$ $S = 4t_6$ or $\frac{2}{3}\frac{\text{area of } D}{3t_6}$ Sc diam. $= \frac{S}{4}$.

Often the thickness t_3 is used in place of t_1 and the strap is uniform in thickness except where t_2 is shown, where it is made $1.25t_3$.

140. In Fig. 137 is shown, more in detail, the strap end of the rod already shown in Fig. 133. The crosshead pin is of that type shown in Fig. 126, which requires a strap end. The brasses extend the whole length of the pin, which is $2\frac{1}{4}''$ diameter.

The strap encloses the brasses and is fastened to the stub end of the rod by means of a gib and cotter or key held in place by an oval point set screw bearing in the bottom of a shallow groove in the side of the cotter.

The oil cup shown is designed to wipe off a drop of oil at each forward stroke. The wiper is a thin piece of brass No. 16 gauge. There are certain dimensions which are given in order to calculate certain others denoted by the letters *a–m–s–n*.

By reference to the sub Figs. 1–2–3–4 of Fig. 137 it will be clear how the various parts would fail if there was not enough material in them at these points.

Suppose the rod in tension and the resistance to the tensile stress was 20,000 lbs. per sq.in. of area in the circular cross section of the smallest part of the rod (at A). The total resistance would be $20{,}000 \times \pi r^2$. The strap would fail in tension as shown in Fig. 1, unless the transverse sectional area through the slots for the gib and cotter was equal to that at (A). Since the area is in four sections, each of the four areas must equal $\frac{\pi r^2}{4}$, but each area is a rectangle whose sides are (a) and the half width of strap at the side of the slot. Equate the rectangle area and $\frac{\pi r^2}{4}$ and we can solve for (a). The strap can now fail by shearing as in Fig. 2. The strength of the material for shear may be taken as 15,000 lbs. per sq.in. This means the area sheared at the end of the strap must be $\frac{1}{3}$ more than the area in tension or $4am \times 15000 = \pi r^2 \times 20000$. The end of the rod end may also fail by shearing out under the pressure from the cotter. Since 2 areas fail, their sum must equal the area just used in finding (m). The cotter and gib also will fail by shearing off in two places. Their sheared area must equal the preceding sheared area of the end of the rod. The thickness of gib and cotter is given in Fig. 6, from which (S) can be calculated. The con-

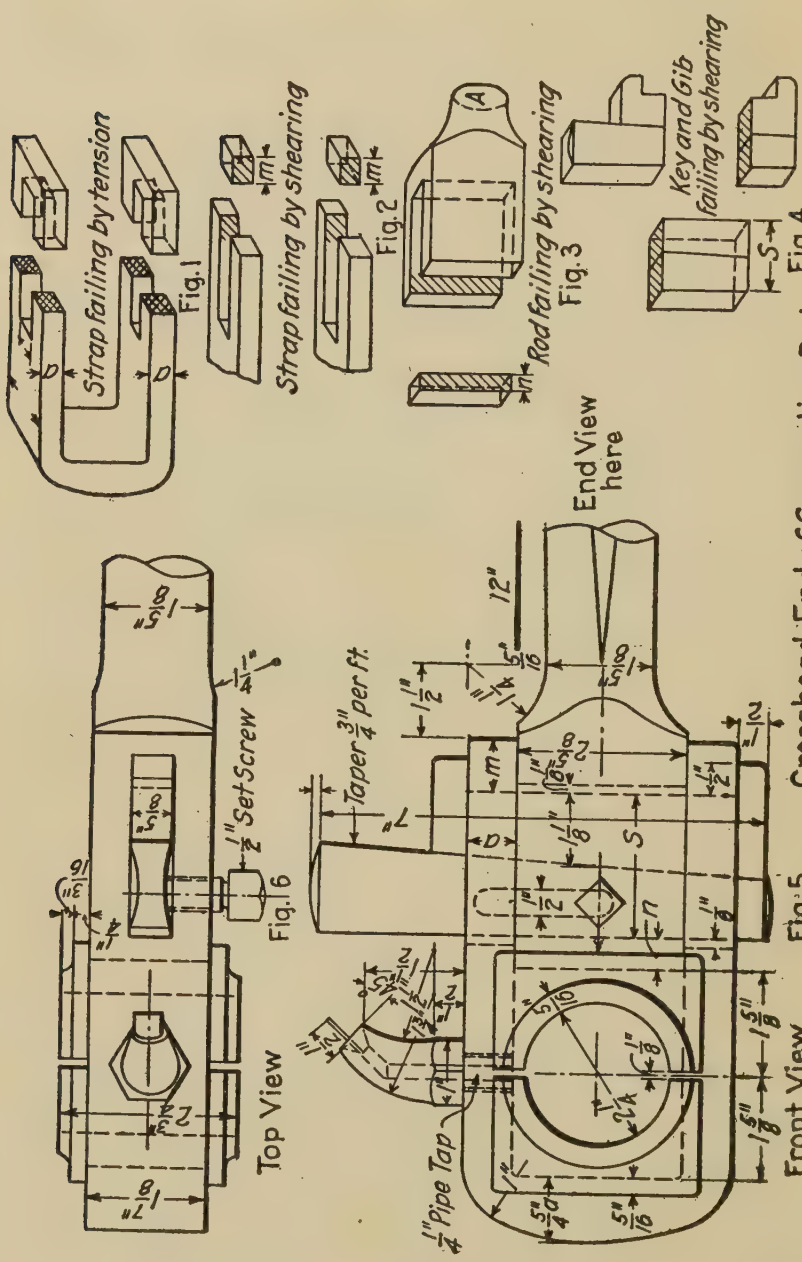
Strap failing by tension
Fig. 1
Strap failing by shearing
Fig. 2
Rod failing by shearing
Fig. 3
Key and Gib failing by shearing
Fig. 4
Crosshead End of Connecting Rod
Fig. 5
Fig. 6
Top View
Front View
End View here
Taper 3/4" per ft.
1/2" Set Screw
1/4" Pipe Tap
12"

FIG. 137.

struction of the curve of intersection on the stub end is shown in Fig. 138.

The dimensions of *a–m–n–s* worked out above should be changed from decimals to the nearest thirty-second of an inch.

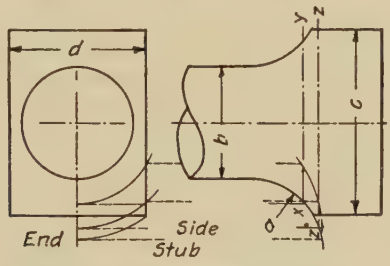

FIG. 138.—Intersection on Rod.

INSTRUCTIONS

Connecting Rods

Example 1. No. 2 paper. 2 hours allowed in class. Av. time required is 3.6 hours.

Prob. 1. Draw three views of a connecting rod for a gasoline engine, bore, , stroke , length c. to c. $=2\frac{1}{4}\times$stroke. Max. pressure in cyl. $=300$ lbs. per sq.in. Style of rod shown in Fig. 131. Calculate the size of wrist pin from Art. 124. The cross-section of rod will be like Fig. 130 (*D*), the depth of small end, width of flanges and web being calculated from Art. 133. The diameter (d_2) and length (l_2) of crank pin may be calculated by assuming a pressure per sq.in. of projected area $=$ lbs. and a length $l_2 = Xd_2$, where $x =$. Calculate the weight of the rod if made of steel weighing 0.**20** lb. per cu.in. W. I. at 0.27 lb., babbitt at 0.3 lb. and C. I. at 0.**28** lb. Title to be "Connecting Rod for $\times$ Gasoline Engine." Put a note on drawing giving data used and results of calculations. Make calculations before class. No sketches needed.

ASSIGNMENT TABLE FOR GASOLINE ENGINE RODS

No.	1	2	3	4	5	6	7	8	9	10	11	12	13
Bore.....	$3\frac{3}{4}$	4	$4\frac{1}{4}$	$4\frac{1}{2}$	$4\frac{3}{4}$	5	$5\frac{1}{4}$	$5\frac{1}{2}$	$5\frac{3}{4}$	6	$4\frac{5}{8}$	$4\frac{7}{8}$	$5\frac{1}{8}$
Stroke....	5	6	6	$5\frac{1}{2}$	6	7	7	$7\frac{1}{2}$	$7\frac{3}{4}$	8	6	7	7
x.....	1	1.1	1.1	1.2	1	1.2	1.25	1.3	1.3	1.4	1.1	1.2	1.2

Prob. 2. 2 exercises at 2 hours each. Av. time required is 7 hours. No. 3 paper. Draw three views of the crank end of a connecting rod for a ×12″ engine (length c. to c. = 3 times stroke), shown in Figs. 132 and 133. Section the upper half of the front view, the upper half of the end view and the lower half of the bottom view. The boxes are brass, the rod and cap are steel, the bolts W. I. and the shims of C. I. Supply all omitted dimensions, and calculate the stress per sq.in. at the root of thread on bolts when the steam pressure is 100 lbs. per sq.in. Also calculate the pressure per sq.in. of projected area of crank pin.

ASSIGNMENT TABLE FOR PROBLEM 2

No.	1	2	3	4	5	6	7
Bore....	9½	10	10½	11	11½	12	13

Prob. 3. Marine end connecting rod. No. 3 paper. 4 hours allowed in class. Av. time required is 7 hours. Make three views of the end shown in Fig. 134. The third view will be a view looking towards the cap. The size of engine is × . Steam pressure in cyl. = 125 lbs. Use the dimensions given in the table and calculate the max. stress per sq.in. on the bolts. Also calculate the pressure per sq.in. of projected area of crank pin. Make the *upper half* of the front view in section, and the lower half of the end view. Give dimensions for working drawing. Title to be "Crank End of Connecting Rod for × Engine." "Marine Type." In a note give steam pressure, thrust on rod and pressure per inch of projected area of crank pin, and stress on bolts.

ASSIGNMENT TABLE FOR PROBLEMS 3 AND 4

No.	1	2	3	4	5	6	7	8	9	10	11	12	13	14	15
Bore....	7	8	9	10	11	12	13	14	15	16	17	18	19	20	13
Stroke ..	8	8	10	10	11	12	14	14	16	16	18	18	20	20	12

Prob. 4. Solid end connecting rod. No. 3 paper. 4 hours allowed in class. Draw three views, front, top and end. Make front view half in section above center line and top view half in section below center line. The size of engine for which the rod is suitable will be a × . Steam pressure 125 lbs. per sq.in. Use the dimensions given in the table for Fig. 135. Calculate the pressure per sq.in. of projected

area of crank pin. Calculate the stress per sq.in. at least section of the end (where the bolts go through). Calculate the shearing stress per sq.in. at the extreme end of the rod. A note is to be placed on the drawing giving the results of these calculations. Give all dimensions on the drawing. Title to be "Connecting Rod End (Solid Type) for a × Engine." Standard title for remainder. Work out calculations before class. No sketches needed. Assignments in preceding Table.

Prob. 5. Strap end of connecting rod. No. 2 paper. Make two views of a strap end of a connecting rod like that shown in Fig. 136. Make the front view a half outside below the center line and make the top view a half section below the center line. Calculate the dimensions when the diameter $D =$ ″, $d =$ ″ and $l = xd$, where $x =$. Art. 86, Fig. 92, shows cotter and gib to use. Make a sketch of the rod end, with dimensions inserted, before class. "Brasses" are described in Art. 105 (Fig. 106). Set screws to be sq. hd. oval point. Calculate the stress per sq.in. at the weakest part of the strap, at (A), through gib and cotter and at (B) when the pull on (D) is 7000 lbs. per sq.in. Also calculate the pressure on the projected area of wrist pin. Put a note on the drawing giving the results of these calculations and the data used. Title to be "Strap End of Connecting Rod." 4 hours allowed in class.

ASSIGNMENT TABLE FOR PROBLEM 5

No.	1	2	3	4	5	6	7	8	9	10
D	$1\frac{1}{4}$	$1\frac{3}{8}$	$1\frac{1}{2}$	$1\frac{5}{8}$	$1\frac{3}{4}$	2	$2\frac{1}{16}$	$2\frac{1}{8}$	$1\frac{7}{8}$	$1\frac{15}{16}$
d	$1\frac{7}{8}$	2	$2\frac{1}{8}$	$2\frac{1}{4}$	$2\frac{1}{2}$	$2\frac{3}{4}$	$2\frac{3}{4}$	$2\frac{7}{8}$	$2\frac{1}{2}$	$2\frac{1}{2}$
x	1	1.1	1.2	1	1.1	1.2	1.25	1.3	1.0	1.2

Prob. 6. Strap end of connecting rod. No. 3 paper. 6 hours allowed in class. Av. time required for first two ex. requirements is 5.85 hours. Fig. 137. Three views of this end. Front, top, and end (from the right hand side). Make the front view a half section above the center line, the top view a half section below the center line, and the end view a half vertical section on right of center line by a plane containing the axis of the wrist pin.

Do not section the oil cup in the front view and end view, nor the gib and cotter. Pipe length will be found in oil cup Table 10. Plot intersection curve from Fig. 138. Calculate the values of a–m–n and s, using the nearest thirty-second of an inch on the drawing. Art. 140 explains these calculations. Calculate the pressure per inch of pro-

jected area of wrist pin when the length of connecting rod is 36″ and the steam pressure is 100 lbs. per sq.in. and the diam. of steam cyl. is $D'' =$. Calculate the stress per sq.in. at smallest sec. of rod end, at least sec. of strap, at (n), at cross-section of key and gib and at end of strap. Put a note on the drawing, giving your results and the data used.

Omit Figs. 1–2–3–4 from the drawing. Give all dimensions and make a standard title, calling the object drawn a "Strap End of Connecting Rod for a $D'' \times 12''$ Engine." No sketches are required for the first exercise, but the calculations for a–m–s and n are to be made before class.

For the second exercise the other calculations are to be made. For the third exercise a dimensioned detail drawing of either the (a) strap or a (b) brass or (c) key and gib are to be made on No. 1 paper to scale.

Assignment Table for Problem 6

No.	1	2	3	4	5	6	7	8	9	10	11	12
D.....	$9\frac{1}{2}$	10	$10\frac{1}{2}$	11	$11\frac{1}{2}$	12	$9\frac{1}{2}$	10	$10\frac{1}{2}$	11	$11\frac{1}{2}$	12
Detail.....	*a*	*b*	*c*	*a*	*b*	*c*	*c*	*a*	*b*	*c*	*a*	*b*

Prob. 7. Draw to scale, quarter size, on No. 1 paper, a detail of the *body* or *stub* only of the connecting rod whose ends are shown in Figs. 132 and 137. The complete rod is shown in Fig. 133.

CHAPTER XIII

ENGINE CRANKS AND ECCENTRICS

141. The crank of an engine is used for transmitting the reciprocating pressure on the piston of an engine into a pressure tending to rotate the crank shaft. The connecting rod is attached at one end to the crank pin at the other end to the crosshead. The crank is a single lever keyed at one end to the crank shaft. At the other end the crank is provided with a projecting pin called the crank pin. The distance between the centers of the crank pin and crank shaft is the "throw" of the crank and is equal to one-half the stroke of the piston.

Reference to Fig. 124 will make clear the relation of the parts of an engine. The crank pin moves at a constant velocity $=\frac{2\pi RN}{12}=$ ft. per min., where $R=$ throw or radius in inches and $N=$ R.P.M., but the piston moves at a velocity which varies from 0 at the end of the stroke to a velocity near the center of the stroke approximately equal to the velocity of the crank pin. The mean velocity of the crank pin is 1.57 times the mean velocity of the piston. The connecting rod exerts a pressure on the crank pin in direct line with the rod. This pressure on the pin is resolved into a tangential component which produces a turning effort on the crank and into a component acting along a radial line through the center of the crank pin circle.

The first component multiplied by the throw of the crank gives the turning moment on the crank shaft.

142. Overhung Cranks. Fig. 139 (A) shows a cast-iron crank with a steel crank pin fastened in by a nut and taper pin through the bolt end.

$R=$ radius of crank or throw;
$d=$ diam. of crank pin;
$l=$ length of crank pin $=zd$.

Where z lies between 1 and 2,

Unwin gives the following values for e:

$$e = 0.08d + 0.2'' \text{ to } 0.12d + 0.2'';$$

$$v = 1.5e.$$

Spooner gives

$$t = .6D \text{ for C. I. cranks.}$$

The diameter and length of the crank pin is determined by the load it must carry and the pressure per inch of bearing area. This latter pressure depends on the kind of machine it

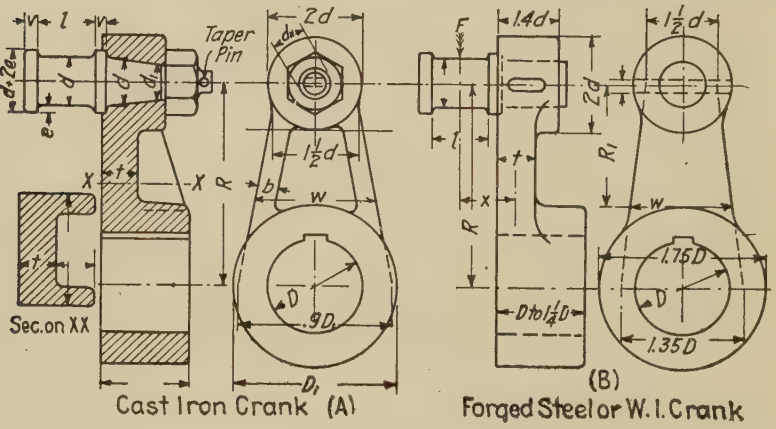

Fig. 139.

is on. The pressures per sq.in. allowed for engines will be found in Table 16. If we have for example a load (F) on a crank pin and the allowable pressure per sq.in. (p) is 300 lbs., the area of pin bearing surface, (A) (see Art. 100), would be expressed as $A = \frac{F}{p}$. If we say the length of crank pin (l) is to be $1\frac{1}{2}d$, the expression for its diameter (d) can be written as $1\frac{1}{2}d^2 = A = \frac{F}{p}$ or $d = \sqrt{\frac{F}{1.5p}}$.

Fig. 139 (B) shows a steel or W.I. crank with a crank pin fastened in by a cotter. This method of fastening in the pin may be used on a C.I. crank but is not so good as the method in Fig. (A).

A third method of securing the pin to the crank is shown in Fig. 140. The pin is forced into a hole in the disc and the end riveted over. Sometimes a key is used instead of *forcing* the pin into the hole.

Fig. 140 shows a C. I. disc crank. The portion of the disc opposite the crank pin is made heavier to balance the weight of the crank pin and part of the weight of the connecting rod.

143. Besides the overhung crank pins set in cranks keyed to crank shafts, we find crank pins made integral with the crank

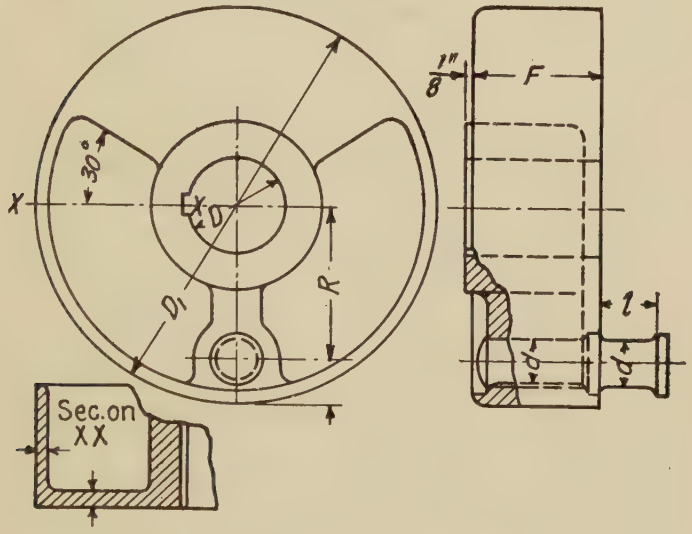

Fig. 140.—Cast Iron Disc Crank.

shafts to which they are joined by a web on each side. Fig. 13 is a crank shaft for a triplex power pump. On each end of this shaft are keyed disc cranks similar to that shown in Fig. 140.

Crank shafts and pins are often forged under the steam hammer as one forging, comprising several crank pins, webs and bearings. Small shafts of this kind are largely used in automobile and marine motors of the internal combustion type with two, four, six or eight cylinders.

144. The calculation of the thickness (t) of the web for a crank of forged steel or wrought iron of the type shown in Fig. 139 (B) involves the force (F), length (R), distance (x), and width W.

The twisting moment on the shaft is $FR=T$, from which the diameter D of the shaft may be obtained (see Art. 89). $D=\sqrt[3]{\frac{5.1T}{f_s}}$. If $W=1.5D$ then we may find the value of (t) approximately by equating the twisting moment of the shaft to the bending moment on the web, that is, $\frac{(1.5D)^2tf}{6}=\frac{D^3f_s}{5.1}$, which

$$t=\frac{6D^3f_s}{5.1(1.5D)^2f}=\frac{.523Df_s}{f}. \quad . \quad . \quad . \quad . \quad . \quad (1)$$

where (f) and (f_s) may be 4500 to 5500 and 5000 to 13,500 respectively.

$FR_1=B=$bending moment through the web at (W).

$Fx=T=$twisting moment. Then the equivalent moment $B_e=\frac{1}{2}(B+\sqrt{B^2+T^2})$, and equating this to the resisting moment of the section at $(W)=\frac{tw^2f}{6}$, we have

$$\tfrac{1}{2}(B+\sqrt{B^2+T^2})=\frac{tw^2f}{6} \quad \text{or} \quad t=\frac{3(B+\sqrt{B^2+T^2})}{W^2f}, \quad . \quad (2)$$

where (f) is the same factor used above for the shaft. The value of (t) in equation (1) enables us to find an approximate value of (x) which is necessary in obtaining (T), used in equation (2) for the final value of (t).

145. Eccentric and Strap. An eccentric is a modified crank used when the crank radius is so small that the crank pin and shaft, about which its center turns, interfere with each other; in fact, the crank pin surrounds the shaft. The eccentric is used to convert circular motion into reciprocating motion and is chiefly employed to drive the slide valve of a steam engine. The eccentric is keyed to the shaft which drives it and imparts motion to the valve by means of the eccentric strap and eccentric rod. The strap is made in two parts to enable it to be placed on the eccentric and the eccentric rod is fastened to the strap by bolts or screws.

Fig. 143 shows an eccentric with its strap and part of the rod. To prevent the strap from slipping off the eccentric its inner surface is made either hollowed or projecting to fit the outside surface of the eccentric. Fig. 141 shows several sections of eccentric and strap bearing surfaces. The most common form is the one shown at (1). In Fig. 143 this style is used. In order to

make the eccentric lighter, two irregular openings are made in it separated by a rib which is usually placed opposite the key at the widest part between the shaft hole and outside of strap.

The diameter of the eccentric may be made equal to (d) obtained from $d=1.2D+2r+\frac{3}{4}''$, where $D=$the diameter of shaft, and $(r)=$the eccentricity of the eccentric center. (A) is made equal to $\frac{B}{2}$, where (B) is the breadth of the eccentric, measured along the shaft. The value of (B) depends on the resistance which the slide valve offers to movement by the eccentric.

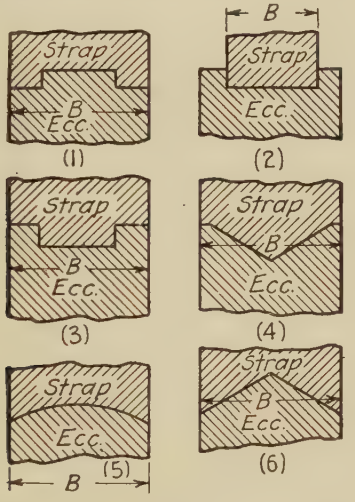

Fig. 141.

As this depends on the steam pressure which produces friction of the valve, on the area of the bearing surface and the coefficient of friction, its calculation is somewhat difficult; therefore the value of (B) will be given.

146. The strap is made in two parts which are held together by two bolts passing through lugs on the outside. The thickness of the strap is taken as $(C)=\frac{B}{2}$. The center line of the strap bolt is drawn tangent to the outside circumference of the strap.

The diameter of these bolts may be taken equal to $.4B$, using the nearest standard diameter above the dimension found by calculation. In order to stiffen the strap on the side opposite

the eccentric rod a rib is cast on the outer surface $\frac{1}{3}$ the width of the strap and projecting a maximum distance equal to $F = C$. This rib narrows as it approaches the bolt lugs until it is $\frac{1}{4}''$ or less in height. The surface of the bolt lug against which the nut bears must be at such a distance from the parting line of the strap halves (xy) that there will be a clearance of $\frac{1}{16}''$ between the nut corners and the stiffening rib. Use a U. S. St. hex. head bolt with a standard nut and a locknut or with two nuts of the same thickness each equal to $\frac{3}{4}$ the bolt diameter.

147. The eccentric rod is fastened to the strap by means of a key, or by threading the end of it or by making a T head and passing screws through it. These three styles are shown in Fig. 142 and in Fig. 1 of Fig. 143. In all these cases the hole or holes which are drilled in the strap should stop at the circle which defines the outside of the strap. In the case where the eccentric rod

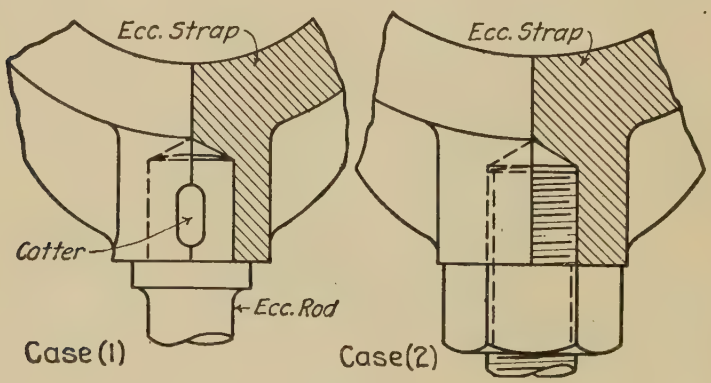

FIG. 142.

end has a T head the screws used are *cap screws* whose diameter is the same as that of the strap bolts. The center lines of these screws are placed as near as possible to the center line of the rod and yet allow the heads of the screws to clear the fillet between the rod and its T head. This fillet may have a radius equal to $\frac{1}{4}''$ or more. The thickness of the T measured parallel to the center line of the rod may be equal to $0.45B$. The diameter (E) of the eccentric rod is taken equal to $0.9B$. By locating the point at the bottom of the tapped hole for the cap screws the surface of the strap can be found against which the T is fastened.

148. The rubbing surfaces of the eccentric and strap are oiled

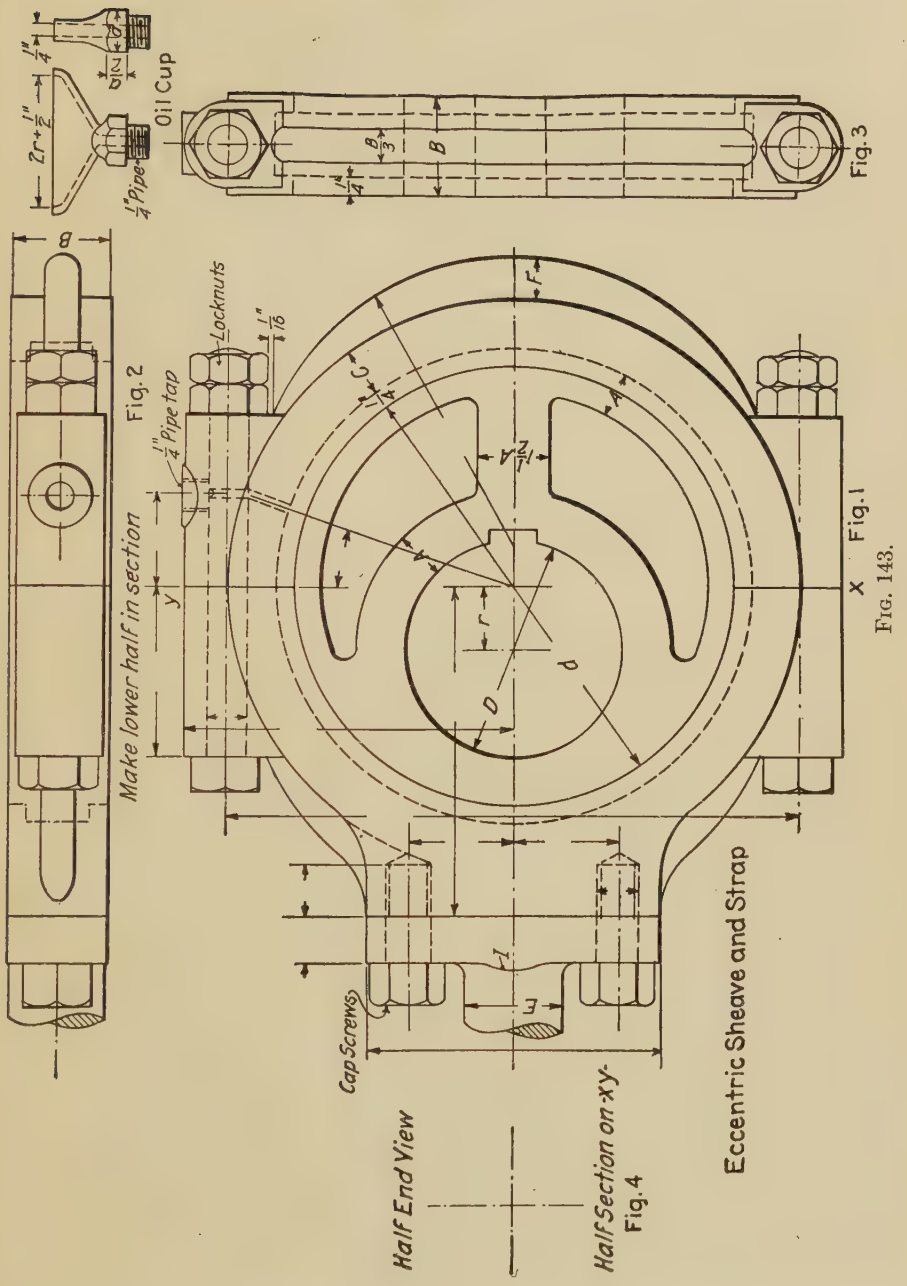
Oil Cup
1/4" Pipe
Fig. 3
Fig. 2
Make lower half in section
Lockmuts
1/4" Pipe tap
Fig. 1
Cap Screws
Half End View
Half Section on xy
Fig. 4
Eccentric Sheave and Strap

FIG. 143.

by means of an oil cup which is screwed into a boss on top of a strap bolt lug. The cup shown in Fig. 143 is one designed to receive oil dropping from a fixed cup. The length of the cup in a line parallel to the eccentric rod must be such that the oil will drop into the cup in any position of the eccentric. $2r+\frac{1}{2}''$ will be long enough. The inside width of the cup at right angles to the long dimension above will be $\frac{1}{4}''$ and the thickness of its sides $=\frac{1}{16}''$. The hex. portion between the cup and threaded pipe end will have a diameter across flats as given in Table 10 (oil cups). The other dimensions below the hex. may be taken from the same Table 10. In order to permit the oil to flow around the strap bolt, the latter is grooved to a depth equal to the depth of thread on it. See Table 1, Col. 18, for diameter at root of threads of U. S. St. bolts.

INSTRUCTIONS

Cranks

Arts. 141–143.

Example 1. No. 2 or 3 paper. 2 hours allowed in class. Av. time required is 4 hours. Draw two views of a crank and crank pin. The pin is to be fastened to the crank in the manner shown in Fig. . The crank is to be like that shown in Fig. . Calculate the crank pin dimensions from the data given in the Table below. The load (F) = lbs. The value of $p=$ lbs., the length $l=zd$ where $z=$. The radius $R=$ ". The finished plate should be a working drawing with all dimensions given, standard title, etc. Calculate the diam. D, using $f=9000$. (Art. 89.)

Assignment Table (Cranks)

No.	1	2	3	4	5	6	7	8	9	10
Pin	Fig. 139*A*	Fig. 139*A*	Fig. 139*A*	Fig. 139*B*	Fig. 139*A*	Fig. 140	Fig. 140	Fig. 139*B*	Fig. 139*B*	Fig. 139*B*
Crank.	Fig. 139*A*	Fig. 139*A*	Fig. 139*B*	Fig. 139*B*	Fig. 139 *B*	Fig. 139*B*	Fig. 139*A*	Fig. 139*B*	Fig. 139*B*	Fig. 139*A*
F	6300	9800	14200	15400	25000	25000	39500	6300	9800	14200
p	1000	1090	1100	1200	1200	1000	1000	900	900	1000
z	1	1	1	1.1	1.1	1.2	1.2	1.1	1.1	1.1
R	6	8	10	12	14	16	18	7	9	11

It may be necessary in some cases to increase the value given for (R), if the hubs interfere.

Prob. 1. Draw the crank shaft shown in Fig. 13, and show on each end of it a disc crank having the same throw as the forged crank. The cranks are to be placed at 120° from each other. Make the crank pin length for the disc pins equal their diam., the pressure on them being the same as the center pin.

Prob. 2. Calculate the thickness (t) of the web for a W. I. crank, for assignment No. in the preceding table, using $f_s = 5500$ and $f = 5000$.

Prob. 3. Draw a C. I. crank of the following size. $R = 12''$, $D = 5\frac{1}{2}$, $d = 3''$, $l = 3\frac{1}{2}''$, using a nut on the inside end of crank pin. $t = 2''$. Length of hub $= D$. No. 2 paper.

Prob. 4. Draw a W. I. crank with the following dimensions: $R = 18''$, $D = 8''$, $d = 5''$, $l = 5\frac{1}{2}''$, $t = 4''$, length of hub $= 6\frac{1}{2}''$, $D_1 = 14\frac{3}{4}''$. Use a cotter to fasten the pin to crank whose width is $2\frac{3}{8}''$ at large end and thickness $= 1''$. Use No. 2 paper.

Prob. 5. Draw a C. I. disc crank with the following dimensions: $R = 12''$, $D = 6\frac{1}{2}''$, $D_1 = 2'\text{–}8''$, $F = 5''$, $d = 4''$, $l = 4\frac{3}{4}''$. No. 2 paper.

Prob. 6. Draw a C. I. disc crank with the following dimensions: $R = 10''$, $D = 6''$, $D_1 = 2'\text{–}6''$, $F = 4\frac{1}{2}''$, $d = 3\frac{1}{4}''$, $l = 4''$. Use No. 3 paper.

Eccentric and Strap

Size paper No. 3. Drawing to be in pencil only; time allowed 2 exercises in class = 4 hours. Av. total hours required, 5.42. Views to be drawn are: Front view (Fig. 1) of Fig. 143, upper half in section. Top view (Fig. 2), lower half in section. End view (Fig. 4) from the left hand end showing the lower half in section by a plane xy (Fig. 1). *Omit* Fig. 3 on the drawing but use it for reference in making the views called for. Strap is cast iron, ecc. and rod of steel, oil cup brass, bolts and screws W. I. Place the oil cup on the strap in the top and end views and also in the front view, if there is room on it. If not, then place it to the right of and near the end view, from which it is projected.

The following dimensions must be placed on the finished drawing in addition to those shown on Fig. 143. c. to c. of strap bolts; c. to c. of cap screws; length of bolt lug from vertical center line, distance from vertical center line to c. line of oil cup, and to end of ecc. rod T end. Thickness of T head on ecc. rod and width of same. Depth of tapped cap screw hole. Plot intersection curve I.

Make a bill of material for eccentric and strap without the ecc. rod, (on the drawing). Put on a standard title instead of the one shown.

The data for drawing the Plate are as follows: $D = (\quad'')$, $r = (\quad'')$, $B = (\quad'')$ found from assigned column below. Place ecc. center (x)

the center of shaft to the (y) of a vertical and on a line making (z)° with the horizontal.

TABLE OF DIMENSIONS OF ECCENTRICS

	1	2	3	4	5	6	7	8	9	10	12	13	14	15	16	17	18
D	3	3	3	$3\frac{1}{8}$	$3\frac{1}{8}$	$3\frac{1}{8}$	$3\frac{1}{8}$	3	3	3	3	$3\frac{1}{8}$	$3\frac{1}{8}$	$3\frac{1}{8}$	$2\frac{7}{8}$	$2\frac{7}{8}$	$3\frac{1}{4}$
r	1	$\frac{7}{8}$	$1\frac{1}{8}$	1	$\frac{7}{8}$	$1\frac{1}{8}$	$1\frac{1}{8}$	1	$\frac{7}{8}$	$1\frac{1}{8}$	$\frac{15}{16}$	$1\frac{1}{16}$	$\frac{15}{16}$	$1\frac{1}{16}$	$1\frac{1}{8}$	$1\frac{1}{4}$	$\frac{3}{4}$
B	$1\frac{1}{2}$	$1\frac{1}{2}$	$1\frac{1}{2}$	$1\frac{1}{2}$	$1\frac{1}{2}$	$1\frac{1}{2}$	$1\frac{5}{8}$	$1\frac{5}{8}$	$1\frac{5}{8}$	$1\frac{5}{8}$	$1\frac{5}{8}$	$1\frac{9}{16}$	$1\frac{9}{16}$	$1\frac{9}{16}$	$1\frac{5}{8}$	$1\frac{5}{8}$	$1\frac{9}{16}$
x	Above	ab.	ab.	ab.	ab.	ab.	ab.	ab.	...	Below	B	B	B	B	B	B	B
y	Right	R	R	...	L	L	L	L	L	Left	L	L	L	...	R	R	R
z	30	60	75	90	75	60	45	30	0	30	45	60	75	90	75	60	45

Prob. 1. Compare the strength of the two strap bolts at root of thread with that of the eccentric rod. Use the dimensions you have on the drawing.

Prob. 2. Make a detail working drawing of (a) the half of an eccentric strap which is not to be connected to the ecc. rod. (b) Make a working drawing of the half of an eccentric strap which is to receive the ecc. rod cap screws. (c) Make a detail working drawing of the eccentric sheave.

CHAPTER XIV

PULLEYS AND BELTING

149. There are two principal systems used for transmitting power from a prime mover to machinery, namely, (1) toothed gearing and (2) wrapping connectors.

Under the latter head are found belt gearing and rope gearing.

Belts are carried by pulleys which they either cause to rotate or receive motion from. The frictional resistance to slipping of the belt on the surface of the pulley face determines the power transmitted. Belts are made of leather, cotton, cotton leather, rubber, rawhide and leather links. The material most commonly used is leather from the hides of steers, taken from along the back.

Belts are called " single " when the thickness is that of a single hide and double when two or three hides are cemented together. The thickness of single belts varies from $\frac{3}{16}''$ to $\frac{5}{16}''$ but the average is $\frac{7}{32}''$ or $\frac{1}{4}''$, while the thickness of double belts ranges from $\frac{1}{4}''$ to .33″. Rubber belts vary in thickness from .18″ for 3 ply to .45″ for 8 ply. The weight of leather belts is about 55 lbs. per cu.ft. The smallest diameter of pulley on which a belt will run fully loaded without excessive wear, is about 35 times the belt thickness and preferably greater. The width of belts does not go below 2″ as a rule. Up to 4″ the width increased by quarters of an inch, above 4″ up to 7″ by half inches and by inches between 7″ and 20″.

The ends of belts are joined to make a continuous connector. The joint may be laced, sewed, cemented or riveted, the actual strength of the joint being from 60% to 75% that of the belt.

The ultimate strength of good leather belting varies from 3500 to 6000 lbs. per sq.in. but the working strength is taken as 200 to 300 lbs. per sq.in.

150. When a belt is wrapped around the rims of the pulleys which it connects, there will be a certain tension in it which is con-

stant when the belt is at rest. If one pulley is rotated, the initial tension in the belt will be increased in the belt between the pulleys on one side and decreased in the belt on the other side. The difference between the tensions in the tight and loose sides is called the *driving force.* The belt does not slip around the pulleys because of the frictional resistance between the belt and the pulley faces. If the driving force is less than the frictional resistance the pulley will turn when the belt is pulled away from one pulley toward another.

As the *driving force* depends on the difference in tension between the two sides of the belt, it is necessary to know the relation between T_t and T_s. T_t = tension on tight side. T_s = tension on slack side. T_i = initial tension (belt at rest).

Then

$$\frac{T_t+T_s}{2}=T_i \quad \text{or} \quad T_t+T_s=2T_i.$$

The ratio of T_t to T_s depends on the speed of the belt (which involves the centrifugal force at the pulley rim), the coefficient of friction between belt and pulley and the length of the arc of contact between belt and pulley.

By the use of calculus it can be proved that

$$\frac{T_t}{T_s}=E^{\mu\theta},$$

where $E=2.718$, μ = coeff. of friction, θ = the whole angle of contact in circular measure.

This expression may be reduced to the following expressions which are sometimes more convenient to use.

Common log $\frac{T_t}{T_s}$ = $.434\mu\theta$, if θ = circular measure

" " $=0.007578\mu\theta$ if θ is in degrees

" " $=2.729\mu N$ if N = fraction of circum. embraced by the belt.

The value of μ varies from .29 to .46, depending on the condition of the belt and pulley. It may be as low as .15 on oily pulleys

or even as high as .76 for special paper pulleys. For iron pulleys and leather belts the average value of μ is .3. The value of θ for open belts depends on the distance apart of the pulley axes, and the radii of the pulleys connected by the belt. For an open belt $\theta = 180° - 2\phi$, where ϕ is found from

$\sin \phi = \frac{R-r}{l}$, R = rad. of larger pulley,

r = rad. of smaller pulley, and

l = distance between pulley centers, all in inches.

For crossed belts $\theta = 180° + 2\phi$ and ϕ is obtained from

$$\text{Sin } \phi = \frac{R+r}{l}.$$

The arc of contact in a majority of cases is 180° and this is taken often in the computation of tables for belting, a multiplier being used to increase or decrease the width of belt obtained from the tables. When a belt is transmitting power it tends to stretch more on the tight than on the slack side and the driving pulley continually receives more length of belt than it delivers, therefore the velocity of the circumference is faster than that of the belt. The driven pulley on the other hand receives a less length than it delivers and its surface moves slower than the belt. This phenomenon is called the *creep* of a belt. This *creep* together with the slip of belts on the pulleys is from 1% to 3%, the former value being permissible, the latter not to be exceeded. As the slip increases with the belt speed larger values of μ may be taken for higher speeds. Unwin gives the following rule for max. values of μ:

$$\mu = 0.2 + .004\sqrt{V} \quad V = \text{vel. ft. per min.}$$

From the above equations the value of $\frac{T_t}{T_s}$ can be calculated for an assumed value of (μ) when the values of (R), (r), and (l) are given. Unwin gives in the last edition of his Machine Design, Vol. I, the following data regarding the initial tension which has proved, in a number of experiments, not to agree with the

accepted theory of $T_t+T_s=2T_t$, but does agree with the expression $\sqrt{T_t}+\sqrt{T_s}=2\sqrt{T_t}$ (tensions being in lbs. per sq.in.).

As $\frac{T_t}{T_s}=E^{\mu\theta}=K$, we can substitute it in the above formula, which gives

$$\sqrt{T_t}+\sqrt{\frac{T_t}{K}}=2\sqrt{T_t},$$

or

$$T_t=\frac{4K}{(\sqrt{K}+1)^2}T_t,$$

and

$$T_s=\frac{4}{(\sqrt{K}+1)^2}T_t.$$

If we take the values of $\mu=.3$ and θ for an arc of contact of 165° we have $K=2.37$, and $\frac{T_t}{T_t-T_s}=1.18$ instead of 2.5 by the ordinary theory.

151. The driving force $P=T_t-T_s$ and a rule which gives good results is to allow for each *inch* of *belt width for a single belt* a value of 40 lbs.

The horse-power which a belt transmits depends on the force P and the velocity of the belt, that is

$$H=\frac{PV}{33000},$$

where

H = horse-power,
V = vel. of belt in ft. per min.,
P = effective pull on the belt.

The economical speed of belts is from 4000 to 5000 ft. per min.

If a belt runs around a pulley of diameter D'' which makes (N) R.P.M. the expression for H will be

$$H=\frac{P\pi DN}{33000\times 12},$$

or if W = width of belt in inches,

$$H = \frac{40W\pi DN}{33000 \times 12} = \frac{WDN}{3152.8}$$

or

$$W = H \times \frac{3152.8}{DN}.$$

The effective pull on a belt may be reduced by centrifugal force at high speeds to such a point as to prevent the belt from driving. The weight of leather belting is about 0.43 lb. per sq.in. per foot of length. If w = this weight, then the centrifugal force of one foot length of belt one inch square running on a pulley of $\frac{D}{12}$ feet diam. at a speed of v feet per sec. is

$$F = \frac{wv^2}{g \times \frac{D}{12}} = \frac{12wv^2}{gD}.$$

This force on one-half of the pulley circumference produces in each of the straight belt segments a tension $T_c = 0.014v^2$ lbs. per sq.in. The following table gives the tension per square inch for different velocities.

v =	10	15	25	50	75	100	125	ft. per sec.
V =	600	900	1500	3000	4500	6000	7500	ft. per min.
T_c =	1.4	3.1	8.8	35	79	140	218	lbs. per sq.in.

As the centrifugal tension balances part of the tension producing friction on the pulleys, then $T_t - T_c$ and $T_s - T_c$ are the effective tensions preventing slip.

If we take $K = \frac{T_t}{T_s}$, we now have $K = \frac{T_t - T_c}{T_s - T_c}$, or if P = driving effort $= T_t - T_s$ in lbs. per sq.in. of section, $T_t = \frac{K}{K-1}P + T_c$, which shows how the value of T_t is increased by centrifugal tension.

152. In order to calculate the speed (R.P.M.) of pulleys connected by a belt it is necessary to know their diameters and the

R.P.M. of one of them. If there was no slip of the belt the velocity of the circumference of one pulley would equal that of the other pulley, that is if D_1 and D_2 are the diameters of the two pulleys and N_1 and N_2 their respective R.P.M. we would have

$$\pi D_1 N_1 = \pi D_2 N_2.$$

Cancel π and we have $D_1 N_1 = D_2 N_2$.

If there are several pulleys in a train of belting, as in Fig. 144, let N_1 = R.P.M. of the first driver (K), and D_1 = its diameter. N_2 and D_2 = R.P.M. and diameter of the first follower (A). Then $N_1 D_1 = N_2 D_2$. The second driver (B) is on the same shaft as (A) therefore has the same R.P.M. as (A), viz., $N_2 = N_3$, but its diam. being D_3, we have $N_2 D_2 = N_3 D_3 = N_2 D_3$. The second follower ($C$) has a diam. D_4 and makes N_4 R.P.M. and $N_3 D_3 = N_4 D_4$. Substituting for $N_3 D_3$ and $N_2 D_2$ we have

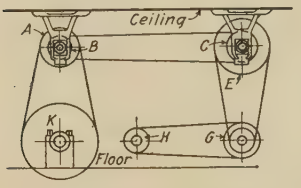

FIG. 144.—Belting Diagram.

$$\frac{N_1 \times D_1 \times D_3}{D_2 \times D_4} = N_4,$$

from which we see that the continued product of the diameters of the drivers multiplied by the R.P.M. of first driver and divided by the continued product of the follower diameters gives the R.P.M. of the last follower. This relation holds for *any number* whatever of drivers and followers. If *all but one* of the diameters and R.P.M. are given, the missing number may be determined by solving the above equation.

153. Pulleys. Pulley is the name given to a wheel which transmits or receives power by means of belting. It has a smooth face, wider than the belt (from $\frac{1}{4}$ to 1″), which is tapered from the center towards each edge to keep the belt from running off if no other prevention exists such as a belt shifter or flanges on each side of the face.

This taper is called the *crown* of the pulley and is indicated in Fig. 146 by the letter (c), the distance being exaggerated for

clearness in the drawing. The rim has a thickness at the edge denoted by (t) and tapers towards the center $\frac{1}{4}''$ per ft. to facilitate drawing the pattern from the mould in the foundry. This same taper is found on the outside of the hub and for the same purpose.

Values for (t) and (c) may be taken as $c=\frac{B+6}{200}$, $t=\frac{D}{200}+\frac{1}{8}''$ for pulleys made of cast iron.

The rims of C.I. pulleys should not be run at a greater speed than 100 ft. per sec. to be safe against bursting.

154. The *arms* of a pulley are made of elliptical or segmental cross section as shown in Fig. 145. The dimension (h) is taken in the plane of revolution of the center lines of the arms and at the circumference of the hub. At the rim (h') is from $\frac{2}{3}$ to $\frac{3}{4}h$, whichever looks better on the pulley considered. The *number of arms* may be taken as 4 up to 20″ in diam. if the width of face is 6″ or less, and 6 arms for sizes above this. Unwin gives the rule for number of arms $=3+\frac{DB}{150}$ the nearest whole number being taken, not less than four.

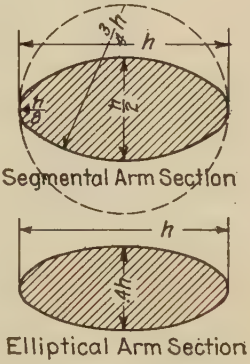

Fig. 145.

155. The *hub* of a pulley may have a diameter at center of twice the shaft diameter and decrease in diam. towards the ends $\frac{1}{2}''$ per ft. The length of the hub varies from $\frac{2}{3}B$ to $\frac{5}{4}B$ depending on whether it is a loose pulley or one keyed to the shaft. The key is placed under an arm to avoid weakening the hub. A set screw is often used to keep the key from being displaced relative to the hub, or vice versa. The set screw in Fig. 146 (*D*) is shown at right angles to the key, but it is often placed so its point will bear on the key instead of the shaft. If the pulley is small a hole may have to be drilled in the rim over the set screw to allow the hole to be drilled and tapped in the hub to receive the screw. Some small pulleys are occasionally fastened to shafts by two set screws without a key, but this practice is not to be recommended. The diameter of set screw lies between $\frac{1}{2}''$ for small pulleys to $\frac{7}{8}''$ for large ones. The center of the

screw may be placed half way between the arm and the end of hub.

156. The size of pulley arms depends on the force exerted on the rim of the pulley tending to make it rotate.

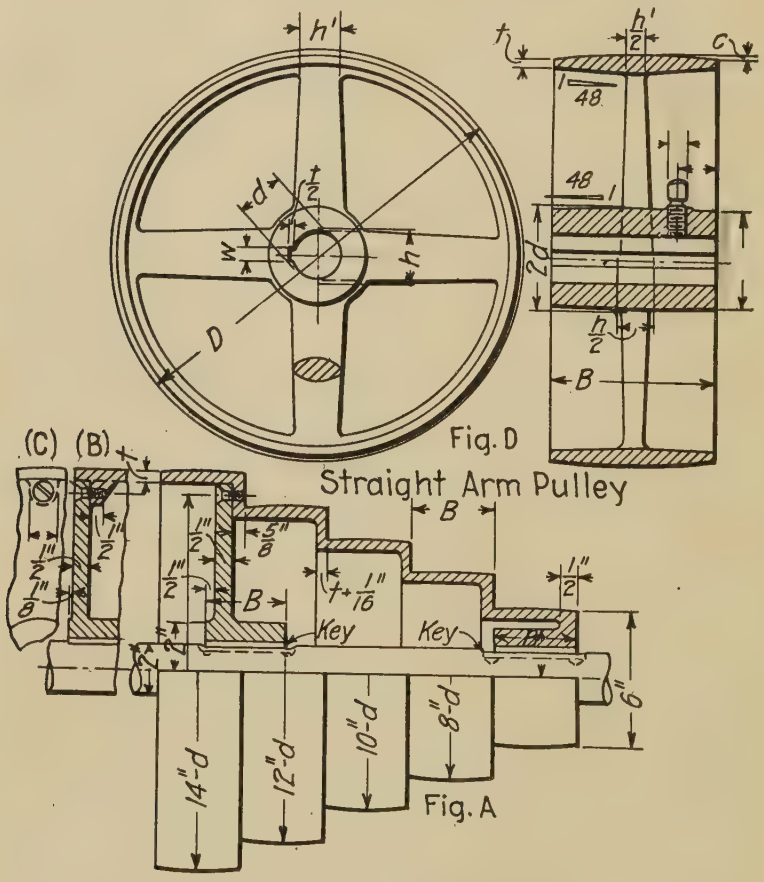

FIG. 146. STEPPED CONE PULLEY.

This force tends to break the arms at the hub so it is only necessary to determine their dimensions at this point. The turning effort (P) at the rim may be considered as 45 B lbs. for single belts up to 90 B lbs. for double belts. B = width of face.

The moment of this force about the center of the pulley is $\frac{P \times D}{2}$. It is somewhat less at the circumference of the hub but this may be neglected. The resistance to breaking at the hub is divided between the arms. The resistance offered to the breaking strain depends on the shape of the arm cross-section, its distribution about an axis parallel to the shaft passing through the center of area of section, and the kind of material.

Since the section of pulley arms is elliptical or segmental and the material cast iron, the resistance of the section may be expressed as $\frac{SI}{c}$, where S = the stress per sq.in. allowed for C. I. I = moment of inertia of the section and c = distance from the neutral axis to the extreme fibre of the section.

The expression for the load on each arm is $\frac{P \times D}{2n}$, where n = number of arms.

The resistance of an arm of elliptical section whose minor axis = 0.4 major axis (h), is $S \times \frac{\pi}{32} \times h^2 \times 0.4h$, which equals $.0393h^3 \times S$.

This is practically the same for a segmental section.

We then have for the expression of bending and resistance to bending $\frac{PD}{2n} = .0393Sh^3$.

The value of (S) should be from 1800 to 2250 lbs. per sq.in. for C. I. arms. For $S = 1800$, we have

$$h = 0.192\sqrt[3]{\frac{PD}{n}}.$$

For $S = 2250$,

$$h = 0.178\sqrt[3]{\frac{PD}{n}}.$$

In case any other value of S is desired the general formula

$$h = \sqrt[3]{\frac{PD}{.0786Sn}}$$

may be used.

The value of (P) is often not definitely known, so the arms must be designed to resist the maximum driving force which is rarely in excess of $\frac{1}{5}$ the greatest tension in the belt. This reduces to the expressions for (P) given previously as $45B$ for single belts, $90B$ for double belts. B = breadth of pulley face.

157. The arms of pulleys are either straight as shown in Fig. 146 (D), or curved as in Fig. 147. The object of curving the arms is to prevent fracture when the casting cools. With modern methods of casting and properly proportioned straight arms, this danger is greatly lessened.

At the present time there are many other kinds of pulleys besides C. I. ones. Wrought iron and pressed steel pulleys are

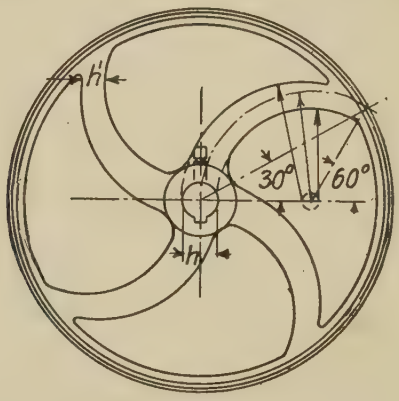

Fig. 147.—Curved Arm Pulley.

used for high speeds and large diameters owing to their lightness and freedom from cooling strains.

Wood pulleys are used where lightness is important as they are 30–70% lighter than C. I. and 30–40% lighter than steel and W. I. pulleys.

Some C. I. pulley rims are made with cork inserts which give a higher efficiency than plain rims. Paper pulleys with and without cork inserts are also used to obtain an increase of efficiency over plain C. I., W. I., or steel pulleys.

Split Pulleys are used when there would be difficulty in placing a pulley on a shaft on account of bearings or other pulleys already in place, or because a pulley would be too large to either handle

or ship if made in one piece. Such pulleys are subjected to the same forces as solid pulleys when once bolted in place on the shaft.

158. The diameter of shaft hole in a pulley does not depend on the diameter nor on the width of the face of a pulley, therefore the hub of a pulley is usually made of such a size as to allow the pulley to be used on several shafts up to a maximum above which it will be necessary to use another size hub. Bushings are used for smaller shafts. The diameter of hub may be assumed for drawing purposes in some such proportion as follows:

From 9″ to 12″ diam. pulley make hub $3\frac{1}{2}$″ diam. when face = 2″

"	9″ to 12″	"	"	$3\frac{1}{2}$″	"	" = 3″– 4″
"	9″ to 12″	"	"	$4\frac{1}{2}$″	"	" = 5″– 6″
"	9″ to 12″	"	"	$5\frac{1}{2}$″	"	" = 8″
"	13″ to 16″	"	"	$3\frac{1}{2}$″	"	" = 2″
"	13″ to 16″	"	"	$3\frac{1}{2}$″	"	" = 3″– 4″
"	13″ to 16″	"	"	$4\frac{1}{2}$″	"	" = 5″– 8″
"	17″ to 24″	"	"	$4\frac{1}{2}$″	"	" = 3″– 4″
"	17″ to 24″	"	"	$5\frac{1}{2}$″	"	" = 5″–12″
"	26″ to 30″	"	"	$5\frac{1}{2}$″	"	" = 4″– 8″
"	32″ to 33″	"	"	$6\frac{1}{2}$″	"	" = 4″–14″

159. Cone Pulleys or Stepped Cone Pulleys are used when varying speeds are desired of a shaft which is run by a belt from a shaft turning at constant speed.

Fig. 146 (*A*) shows a stepped cone pulley having 5 steps. The large end of the cone is filled by a plate which is keyed to the shaft and fastened to the shell of the cone by flat head screws. The screws should not be less than $\frac{3}{8}$″ diameter and 4 or 6 in number. The rim thickness and crowning are calculated as for a straight arm pulley. The thickness of the sides of the steps may equal the sum of (t) and (c), or $t+\frac{1}{16}$″.

The plate may either be set flush with the large end of the cone as at (*B*) or placed against the last step as at (*A*).

On large pulleys this plate is replaced by a spider made with arms to save weight.

160. The weight of C. I. pulleys often needs to be known approximately and the following formulæ are given for making the calculation.

D. K. Clarke gives the weight in lbs. per inch of face width as $W=7.6D-1.5$ up to $12D-9.5$ for rough castings where $D=$diam. of pulley in feet.

An American rule is wgt. of pulley in lbs. =

$$W=(.0175D^{1.87}+3)B+.0362D^2-2.$$

$D=$diam. in inches. $B=$face width (inches).

161. The following books and articles are recommended to those students who wish to study the subject of belting still further.

Machine Design, Vol. 1,	W. C. Unwin.
Machine Design Const. & Drawing,	H. J. Spooner.
Machine Design Const. & Drawing,	D. A. Low and A. W. Bevis.
Machine Design,	Kimball and Barr.
Pulley and Belt Transmission,	Rockwood Mfg. Co. catalogue.
Articles on Belt Transmission,	Proc. A.S.M.E.
Lathe Design,	Nicholson.
Machine Design,	Chas. L. Griffin.
Machine Design,	A. W. Smith.

INSTRUCTIONS

Pulleys

Example 1. Paper No. 2 size. 2 hrs. in class for drawing a pulley in pencil. Scale, full, half, or quarter size. A pulley larger than 11″ diam. up to 21″ diam. to be drawn half size. Above 21″ to be drawn quarter size. Place the front view at the bottom of sheet and section at top of sheet. If it is necessary break away some of the front view to avoid interference with the section. Draw a straight arm pulley whose diam. $D=(\ )''$, $B=(\ )''$, $d=(\ )''$. Take the diam. of hub as given in Art. 158 in Chapter XIV on Pulleys. Use the type of arm section shown in Fig. 145 ( ) making the calculation for its dimensions from Art. 156, using a ( ) belt and a value of $S=(\ )$ lbs. The number of

arms may be taken as in Art. 154, *t*, *c* and *h*, will be found in Art. 153 and 156. Draw in dotted lines a curved arm meeting the rim at the same place as one of the straight arms. Use method shown in Fig. 147. Make a note on the sheet giving the data assumed in calculating the size of arm, as "Arm Calculation for Belt." "Strain in Arm $S =$ lbs. per sq.in." On the pulley itself give *all* the dimensions in numerals. Work out all dimensions before coming to class, and make a sketch with dimensions on it.

TABLE FOR GIVING SIZES USED IN DRAWING STRAIGHT AND CURVED ARM PULLEYS

No.	1	2	3	4	5	6	7	8	9
D	16	16	16	16	16	16	17	17	17
B	4	5	6	7	8	9	5	6	7
d	$1\frac{3}{4}$	$1\frac{3}{4}$	$1\frac{7}{8}$	$1\frac{7}{8}$	2	2	$1\frac{7}{8}$	$1\frac{7}{8}$	2
Arm	Seg.	Ell.	Seg.	Ell.	Seg.	Ell.	Seg.	Ell.	Seg.
Belt	Sing.	Doub.	Sing.	Doub.	Sing.	Doub.	Sing.	Doub.	Sing.
S	1800	1900	2000	2250	1800	2000	1900	2200	1800

No.	10	11	12	13	14	15	16	17	18
D	17	18	18	18	19	19	19	19	20
B	8	6	7	8	6	7	8	9	6
d	2	$2\frac{1}{8}$	$2\frac{1}{8}$	$2\frac{1}{4}$	$2\frac{1}{4}$	$2\frac{1}{4}$	2	$2\frac{1}{8}$	$2\frac{1}{4}$
Arm	Ell.	Seg.	Ell.	Seg.	Ell.	Seg.	Ell.	Seg.	Ell.
Belt	Doub.	Sing.	Doub.	Sing.	Doub.	Sing.	Doub.	Sing.	Doub.
S	2000	1900	2000	1900	2200	1800	2000	2200	2250

No.	19	20	21	22	23	24	25	26	27	28
D	20	20	20	21	21	21	22	22	24	30
B	7	8	9	5	6	7	6	7	8	8
d	$2\frac{1}{8}$	$2\frac{1}{4}$	$2\frac{1}{4}$	$2\frac{3}{8}$	$2\frac{3}{8}$	$2\frac{1}{4}$	$2\frac{3}{8}$	$2\frac{1}{2}$	$2\frac{5}{8}$	$2\frac{3}{4}$
Arm	Seg.	Ell.	Seg.	Ell.	Seg.	Ell.	Seg.	Ell.	Seg.	Ell.
Belt	Sing.	Doub.	Sing.	Doub.	Sing.	Sing.	Doub.	Doub.	Doub.	Doub.
S	1900	2250	2000	2000	1900	1800	2000	2250	2000	2250

An assignment No. with an *e* after means take all data from the column given except the last two lines which will be taken from the next column to the right.

Example 2. Cone Pulley. No. 2 Paper. 2 hrs. for pencil in class. Scale half size. Place the cone pulley with its axis vertical, small end

near bottom of paper. Make a view of the large end near the top of the sheet. *Omit the shaft* in both views. Use the same diam. steps as given in Fig. 146. Make $B = (\ )''$, d = shaft = $(\ )''$. Use the style of end plate shown in Fig. ( ) of Fig. 146. Make the screws $\frac{3}{8}''$ diam. 4 in number. Other dimensions as shown in Fig. 146 to be placed on drawing.

TABLE FOR CONE PULLEY ASSIGNMENT

No.	1	2	3	4	5	6	7	8	9	10	11	12	13
B	2	2	2	2	2	2	2	2	$2\frac{1}{4}$	$2\frac{1}{4}$	$2\frac{1}{8}$	$2\frac{1}{8}$	$2\frac{1}{4}$
d	$1\frac{7}{8}$	$1\frac{7}{8}$	$1\frac{3}{4}$	$1\frac{7}{8}$	$1\frac{3}{4}$	2	$1\frac{1}{2}$	$1\frac{1}{4}$	2	$2\frac{1}{8}$	$1\frac{7}{8}$	$1\frac{3}{4}$	2
Style	*A*	*B*	*A*	*B*	*A*	*B*	*A*	*B*	*B*	*B*	*B*	*A*	*B*

No.	14	15	16	17	18	19	20	21	22	23	24	25	26
B	$2\frac{1}{4}$	$2\frac{1}{4}$	2	$2\frac{1}{8}$	$2\frac{1}{2}$	$2\frac{1}{2}$	$2\frac{1}{2}$	$3\frac{1}{4}$	3	$2\frac{1}{2}$	$2\frac{1}{2}$	$2\frac{1}{4}$	2
d	2	$1\frac{7}{8}$	$1\frac{7}{8}$	2	2	2	2	$2\frac{1}{8}$	$2\frac{1}{8}$	$2\frac{1}{4}$	$2\frac{1}{8}$	$2\frac{1}{8}$	2
Style	*B*	*A*	*A*	*A*	*B*	*A*	*B*	*B*	*B*	*B*	*A*	*A*	*A*

Pulley Calculations

Prob. 1. In Fig. 144 is shown a train of belting connecting an engine flywheel (K) with a generator pulley (H). The flywheel belts to a jack shaft on which is a pulley (A) and a pulley (B). From (B) the belt runs to a line shaft carrying two pulleys (C) and (E). From pulley (E) a belt runs to a counter shaft on which are two pulleys (F) and (G), the latter belting direct to the generator pulley (H).

Suppose the R.P.M. of (K) and (H) are known, the horse-power of the motor and the diameters of all the other pulleys except one. It is desired to find the proper diameter and width of face of the pulley to be used in the place of the missing pulley. The R.P.M. of (K) and (H) as well as a series of diameters of the intermediate pulleys are given below. Omit the diameter of some pulley (the one indicated in the assignment table following) and calculate the diameter and width of face of the pulley which should be used in place of the one omitted. Use driving force = 40 lbs. per in. of belt width.

DIAMETERS OF PULLEYS

Pulley.	*K*	*A*	*B*	*C*	*E*	*F*	*G*	*H*
Diameter.....	60	18	20	22	24	20	19	16
R.P.M.....	*X*	....	....	....	....	....	....	*Y*

Use column ( ) below for obtaining the necessary values of X, Y, horse-power, etc.

	a	*b*	*c*	*d*	*e*	*f*	*g*	*h*	*i*	*k*	*l*	*m*	*n*	*o*	*p*	*q*	*r*
X	50	53	58	60	65	70	79	100	120	150	175	190	200	90	110	130	160
Y	215	228	249	258	280	301	340	430	516	645	751	817	860	387	475	560	687
Omit	*A*	*H*	*B*	*C*	*E*	*F*	*G*	*A*	*B*	*C*	*E*	*F*	*G*	*H*	*A*	*B*	*C*
H.P.	6	6	8	9	10	10	10	14	15	16	18	19	10	14	15	16	17

Prob. 2. A pulley (A'') diam. making (B) R.P.M. drives a second pulley which makes (C) R.P.M. and the H.P. transmitted is (D). Find the diam. and face of second pulley when the values of A–B–C–D are given as below in column ( ).

Table for Problem 2

	a	*b*	*c*	*d*	*e*	*f*	*g*	*h*	*i*	*k*	*l*	*m*	*n*
A	10	12	14	16	18	20	22	24	26	28	30	32	34
B	200	190	180	160	150	140	140	120	110	100	90	80	70
C	70	90	100	120	140	120	150	140	130	120	110	100	90
D	6	7	8	9	8	7	6	5	6	7	8	9	10

Prob. 3. A (A'') diam. pulley makes (B) R.P.M. and its face is (C'') wide. What H.P. will it transmit when using a single belt. Use data in column ( ) below.

Prob. 4. Take the pulley given in Problem 3, suppose it transmits (D) horse-power. How many R.P.M. ought it to make if the face is the same width (C'') as above. Use column ( ) below.

Table for Problems 3 and 4

	a	*b*	*c*	*d*	*e*	*f*	*g*	*h*	
A	24	24	26	28	30	32	34	36	use this line for 3 and 4.
B	200	190	180	190	170	160	140	150	use this line for 3 only.
C	6	7	8	9	8	9	10	11	use this line for 3 and 4.
D	5	6	7	8	9	10	11	12	use this line for 4 only.

Prob. 5. Two pulleys are (A) ft. apart and their diameters are (B'') and (C''). If the driving force is (D) lbs. find the tension on the tight and loose sides of the belt and the initial tension when the belt is at

rest. Coeff. of friction = 0.3. What H.P. is transmitted when the larger pulley makes (*E*) R.P.M.? Use Table below for values of *A–B–C–D–E*.

TABLE FOR PROBLEM 5

	a	*b*	*c*	*d*	*e*	*f*	*g*	*h*	*i*	*k*	*l*	*m*	*n*	*o*
A	25	28	29	30	32	34	24	26	31	27	33	35	37	39
B	12	14	16	16	17	20	20	22	22	22	18	18	18	18
C	30	32	30	32	31	36	30	30	34	36	24	30	26	28
D	300	400	500	600	300	400	500	600	300	200	400	500	600	700
E	100	120	130	140	100	110	120	130	140	150	160	170	100	110

Prob. 6. Taking the dimensions *A–B–C–D* from the above Table, find the values of $T_s T_t T_t$ using the theory taken from Unwin in Art. 150.

Prob. 7. Find the tensions, $T_t T_s$ and T_t when the centrifugal force is taken into account (Art. 151). Use the data from the above Table. In order to obtain a velocity of belt take the R.P.M. of the larger pulley as three times the value of (*E*) given in the Table above.

Prob. 8. Calculate the weight of your C. I. straight arm pulley as closely as possible and then compare this weight with the weight as figured by D. K. Clarke's rule and by the American rule. The weight of C. I. = .26 lb. per cu.inch.

Prob. 9. Calculate the tension per inch of width in a belt $\frac{7}{32}''$ thick due to centrifugal force when the belt is running 5000 ft. per min.

Prob. 10. Calculate the unit stress in the shaft of your pulley as given in assignment table for Ex. 1 supposing it to be of wrought iron. (Art. 89).

CHAPTER XV

SPUR GEARING

161. Toothed wheels are used to communicate motion between shafts which are (1) parallel, (2) non-parallel, but in the same plane, (3) non-parallel and non-intersecting, (4) at right angles.

To the 1st class belong "spur gears," to the second "bevel gears," to the third "spiral gears" and to the fourth (which is a special case of the third) "screw gears." In all these cases the working surfaces of the teeth transmit motion by sliding contact. The demonstration of this as well as the theory of the form of these surfaces will be found in the text books on mechanism. *Spur gears, Bevel gears* and *Worm gears* will be taken up in this order in this course.

162. Spur Gears. These are cylindrical wheels having teeth on the periphery which roll in contact with the same velocity ratio as two cylinders in contact or as two pulleys connected by a belt. The circle of the gear which is used for calculating this velocity ratio is called the *pitch circle,* the depth of a tooth being taken partly outside and partly inside this circle. The circle which passes through the tops of the teeth and which has the greatest diameter of any part of the wheel is called the *addendum circle.* It is the outside diam. of the cylinder into which the cutter enters to form the teeth on cut gears. The circle which passes through the bottom of the spaces between the teeth is called the *dedendum* or *root circle.* See Fig. 151. The curves which form the faces and the flanks of a tooth are either cycloidal (as in Fig. 151) or involutes of a base circle which is inside the pitch circle, as shown in Fig. 150.

163. The width of a tooth on the pitch circle is governed by the pressure which the gear transmits and the length of the tooth. The distance measured along the pitch circle from a point on the face of one tooth to the corresponding point on the next tooth is called the *circular pitch.* It includes a tooth and a space. In

cut gears the tooth and space are equal in width but in gears having cast teeth the space is wider than the tooth, the difference in width being called *backlash*. The *addendum* (in cast gears) is found by multiplying the circular pitch (P) by some fraction which will give a practical result as ($.3P$). The *dedendum* equals the addendum plus a small amount called the *clearance*, which allows the tops of the teeth of one gear to clear the bottoms of the spaces on the other. This clearance is taken as ($0.08P$) on cast gears.

On gears with cut teeth the depth of the tooth is determined from a term called *diametral* pitch. This term is the number obtained by dividing the number of teeth in the gear by its pitch diameter. The commercial diametral pitches begin with 1 and increase by fourths up to 3, then $3\frac{1}{2}$, 4 and by whole numbers up to 12, then by even numbers to 32, 36, 40, 48. The product of the circular and diametral pitch equals $3.1415=\pi$, so if one pitch is known, the other one can be easily found.

164. In speaking of diametral pitch the terms *three pitch*, *eight pitch*, etc., are used, whereas circular pitch is expressed in inches and decimals of an inch. Diametral pitch is a ratio; circular pitch is a linear distance. The smaller the diametral pitch the larger the tooth. The addendum (A) of a cut tooth equals the reciprocal of the diametral pitch. See Fig. 151. The clearance (cl) equals $\frac{1}{10}$ the addendum and the dedendum (E) equals the sum of addendum and clearance. Since the depth of a tooth is the sum of addendum and dedendum, we can write an expression for the depth in terms of the diametral pitch (p), viz.

$$\text{depth}=\frac{1}{p}+\frac{1}{p}+\frac{1}{10p}=\frac{2}{p}+\frac{1}{10p}=\frac{21}{10p}.$$

The outside diameter of the gear, which is the same as the diameter of the circle passing through the tops of the teeth (called the addendum circle) is found by adding twice the addendum to the pitch circle diameter. If $D=$the pitch diameter then the outside diameter $D_0=D+2A$; but $A=\frac{1}{p}$, then $D_0=D+\frac{2}{p}$. Since $D=\frac{N}{p}$, where $N=$number of teeth, we have by substitution,

$$D_0=\frac{N}{p}+\frac{2}{p} \quad \text{or} \quad D_0=\frac{N+2}{p}.$$

The following table gives the relation between diametral and circular pitches.

Diametral Pitch.	Circular Pitch.	Diametral Pitch.	Circular Pitch.	Diametral Pitch.	Circular Pitch.
1	3.141	5	0.628	20	0.157
1¼	2.513	6	0.524	22	0.143
1½	2.094	7	0.449	24	0.131
1¾	1.795	8	0.393	26	0.121
2	1.571	9	0.349	28	0.112
2¼	1.396	10	0.314	30	0.105
2½	1.257	11	0.286	32	0.098
2¾	1.142	12	0.262	36	0.087
3	1.047	14	0.224	40	0.079
3½	0.898	16	0.196	48	0.065
4	0.785	18	0.175		

165. In order to train the eye to identify teeth of different pitches a number of teeth are shown full size in Figs. 148, 149 and marked with their proper pitch number.

166. In machine drawings the outlines of wheel teeth are not shown as a rule, but in case they may be required, a method is shown for both involute and cycloidal systems. In the involute system the tooth outline is a single circular arc between the addendum and base circles (Fig. 150). The angle of action is taken as 15° and (y) is the point on the line of centers of the gears in mesh. The base circle is tangent to the line drawn through (y) making 15° with the common tangent to the two pitch circles through (y). The point (x) on this 15° line of action is found by drawing a line from the center of the pitch circle perpendicular to the line of action. (x) is the center of the arc forming the face of the tooth whose radius $R = xy$. This arc terminates at the base circle which is a circle tangent to the line of action and has its center at the center of the wheel. From the base circle to the root circle the line (mo) is radial. This distance is usually so short that the fillet completes the part of the tooth inside the base circle. The width of a tooth equals the space, each one being half the circular pitch.

167. If the teeth are cycloidal in shape the outline is composed of two curves, one for the face, the other for the flank, as shown in Fig. 151. The radii for the curves are obtained from the table from Grant's Odontics by multiplying the tabular value by the circular pitch or dividing the values given for diametral pitch

by the diametral pitch of the wheel. The centers of the arcs for the faces are taken inside the pitch circle on a circle whose

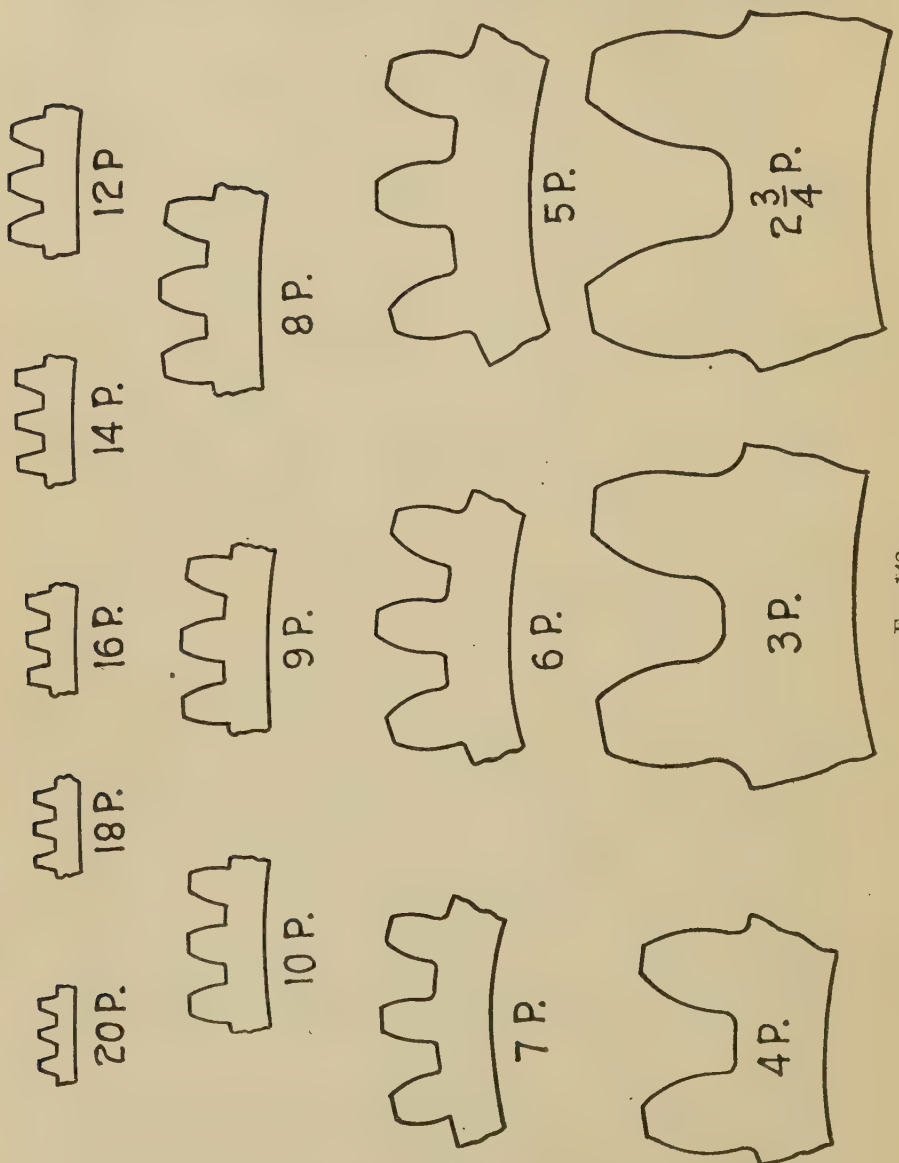

FIG. 148.

radius is *less* than the pitch circle by an amount called (dis.) whose tabular value is changed according to the pitch of the wheel.

The flank arc centers are on a circle of *greater* radius than the pitch circle. The increase of radius is the tabular (dis.) given

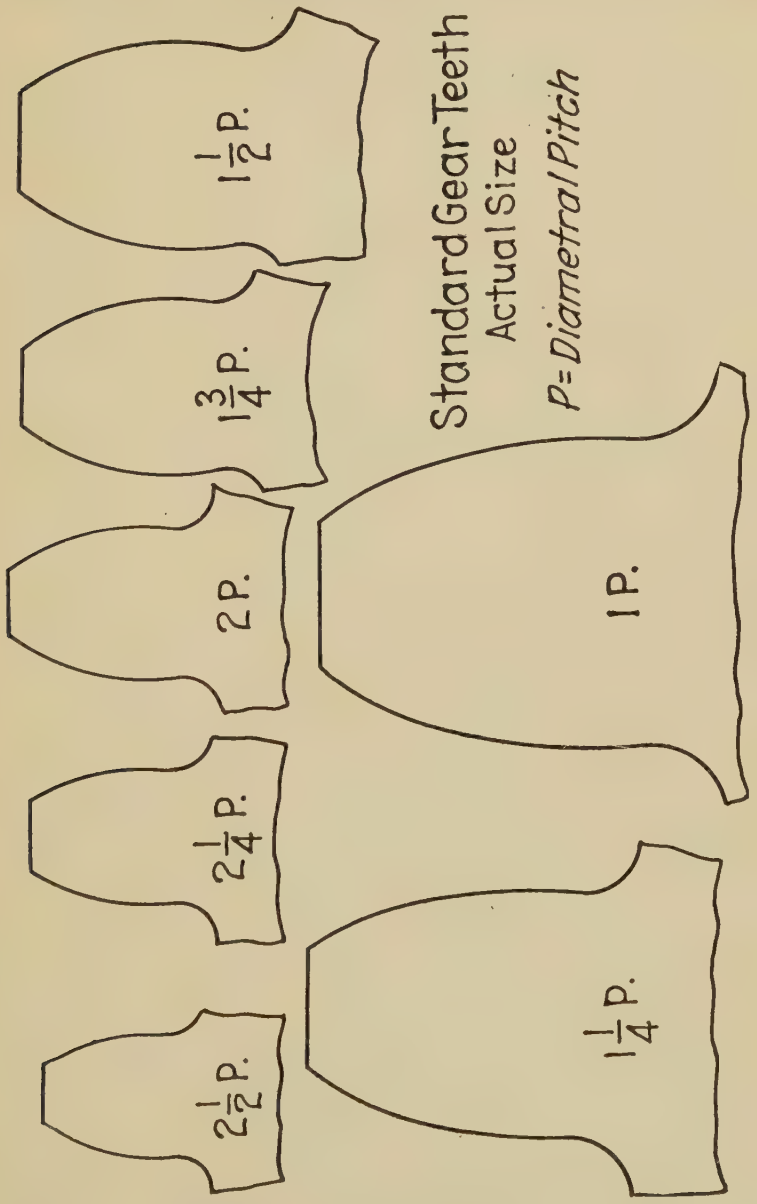

Fig. 149.

for flanks, changed to suit the pitch of the wheel. See Fig. 151. The curves thus drawn are *exact* outlines for the number of

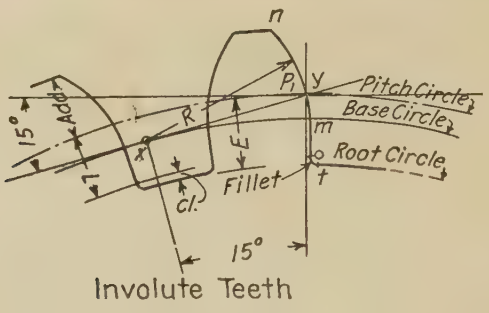

Fig. 150.

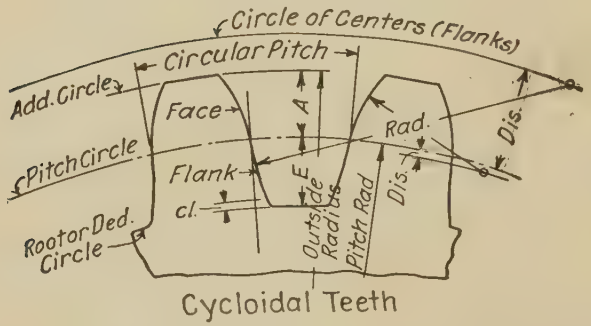

Fig. 151.—Construction of Teeth by Grant's Odontograph Table.

teeth given in column 1 of the following table, but can be used for the numbers of teeth given in column 2.

Grant's Odontograph Table from Odontics

No. of Teeth.		For 1 Diametral Pitch. For any other pitch divide given values by that pitch.				For 1 Inch Circular Pitch. For any other pitch multiply given values by that pitch.			
		Faces.		Flanks.		Faces.		Flanks.	
Exact.	Intervals.	Rad.	Dis.	Rad.	Dis.	Rad.	Dis.	Rad.	Dis.
10	10	1.99	.02	− 8.00	4.00	.63	.01	−2.55	1.27
11	11	2.00	.04	−11.05	6.50	.63	.01	−3.34	2.07
12	12	2.01	.06	.....	....	.64	.02		
13½	13– 14	2.04	.07	15.10	9.43	.65	.02	4.80	3.00
15½	15– 16	2.10	.09	7.86	3.46	.67	.03	2.50	1.10
17½	17– 18	2.14	.11	6.13	2.20	.68	.04	1.95	0.70
20	19– 21	2.20	.13	5.12	1.57	.70	.04	1.63	0.50
23	22– 24	2.26	.15	4.50	1.13	.72	.05	1.43	0.36
27	25– 29	2.33	.16	4.10	0.96	.74	.05	1.30	0.29
33	30– 36	2.40	.19	3.80	0.72	.76	.06	1.20	0.23
42	37– 48	2.48	.22	3.52	0.63	.79	.07	1.12	0.20
58	49– 72	2.60	.25	3.33	0.54	.83	.08	1.06	0.17
97	73–144	2.83	.28	3.14	0.44	.90	.09	1.00	0.14
290	145–300	2.92	.31	3.00	0.38	.93	.10	0.95	0.12
	rack	2.96	.34	2.96	0.34	.94	.11	0.94	0.11

168. The following formulæ have been arranged so as to be easily found and used with either diametral or circular pitch.

No.	Wanted.	Calculation Required.	Formula.
1	Diametral pitch (p)	Divide π by circular pitch (P)	$p=\frac{3.1416}{P}$
2	" "	" No. of teeth in wheel by pitch diam.	$p=\frac{N}{D}$
3	Circular pitch (P)	Divide π by diametral pitch (p)	$P=\frac{3.1416}{p}$
4	" " (P)	" pitch circum. by No. teeth	$P=\frac{\pi D}{N}$
5	Pitch diam. (D)	Mult. No. of teeth by circ. pitch and divide by π	$D=\frac{N\times P}{3.1416}$
6	" " (D)	Divide No. of teeth by diam. pitch	$D=\frac{N}{p}$
7	C. to c. of gears	Add No. of teeth in gears and divide by 2×diametral pitch	$C=\frac{N+N_1}{2p}$
8	" "	Add No. of teeth in gears, multiply by circular pitch and divide by 2π	$C=\frac{(N+N_1)P}{6.283}$
9	Addendum (A)	Divide 1 by diam. pitch	$A=\frac{1}{p}$
10	" (A)	" circ. pitch by π	$A=\frac{P}{3.141}$
11	Clearance	Divide 0.157 by diametral pitch	$Cl=\frac{0.157}{p}$
12	"	" circular pitch by 20	$Cl=\frac{P}{20}$
13	Depth of tooth	" 2.157 by diam. pitch	$A+E=\frac{2.157}{p}$
14	" " "	Multiply circ. pitch by .6866	$A+E=P\times.6866$
15	Thickness of tooth	Divide 1.5708 by diam. pitch	$T=\frac{1.5708}{p}$
16	" " "	" circular pitch by 2	$T=\frac{P}{2}$
17	Outside diam.	Add 2 to No. of teeth and divide by diametral pitch	$D_0=\frac{N+2}{p}$
18	" "	Add 2 times Addendum to pitch diam.	$D_0=D+2A$
19	" "	Add 2 to No. of teeth, multiply by circ. pitch and divide by π	$D_0=\frac{(N+2)P}{3.1416}$
20	No. of teeth	Multiply pitch diam. by diam. pitch	$N=D\times p$
21	" " "	Multiply diam. by π and divide by circ. pitch	$N=\frac{D\times 3.1416}{P}$

169. In the preceding articles, the form and representation of spur gear teeth have been treated as much as is necessary for representing them in a drawing. In very many cases it is not at all necessary to show on the drawing more than the pitch circle, addendum and dedendum circles. The addendum circle gives the outside diameter of the gear blank before the teeth are cut. The dedendum circle shows how deep the teeth are and the pitch circle shows what diameter was used in the calculations for speed, etc. Certain data must be given on the drawing in the form of a table for the information of the workman who cuts the teeth. Each gear wheel on a drawing must have the information necessary for cutting its teeth. For example, suppose a pinion and gear are to have 13 and 72 teeth, 2 diametral pitch, pitch diameters, $6\frac{1}{2}''$ and $36''$.

The following table gives the data required:

DATA FOR CUTTING

	Pinion.	Gear.
Number of teeth	13	72
Diametral pitch	2	2
Depth of tooth	1.078″	1.078″
Addendum	0.50″	0.50″
Chordal pitch	0.784	0.7853
Number of cutter	8	2

The number of the cutter depends on the number of teeth in the wheel and may be found from the following table. Eight cutters are required for each pitch and are numbered from 1 to 8. Any gear of one pitch will mesh with any other gear or with a rack of the same pitch.

TABLE FOR CUTTERS FOR INVOLUTE GEAR TEETH

No. 1 will cut from 135 teeth to a rack
" 2 " " " 55 " " 134 teeth
" 3 " " " 35 " " 54 "
" 4 " " " 26 " " 34 "
" 5 " " " 21 " " 25 "
" 6 " " " 17 " " 20 "
" 7 " " " 14 " " 16 "
" 8 " " " 12 " " 13 "

170. In some shops a gear drawing has given on it the number of teeth, diametral pitch, pitch diameter, width of face, and outside diameter in a note near each gear. The method of indicating this is as follows:

$$62T-2DP-31''PD.-6''F.-32''O.D.$$

On drawings which are more or less assembly drawings this method is to be recommended in preference to that given in Art. 169. The addendum and pitch circles are drawn full and light, the dedendum circle broken.

171. Spur wheels are made from a solid cylinder when they are small and are then called pinions. A hole is bored axially through the cylinder to take a shaft. A pinion is shown in Fig. 153 at (*A*). As the gear increases in diameter it is made lighter by cutting away the metal from the sides between the center and the teeth leaving a web in the center plane. This is shown by gear (*B*) in Fig. 153. Sometimes the web is lightened by cutting holes in it.

The web thickness may be taken conveniently as $\frac{P}{2}+\frac{1}{8}''$ and the thickness of rim inside the teeth as equal to $\frac{P}{2}$ (P = circular pitch.) This dimension is indicated on gear (*C*) Fig. 153 by the letter (*c*). The diameter of the hub may be taken as *twice* the shaft diameter. Still larger wheels require arms which are made of oval cross section, as shown in Fig. 145, or of the sections shown in Fig. 152 (*A*) and (*B*). Of the last two, (*A*) is used on

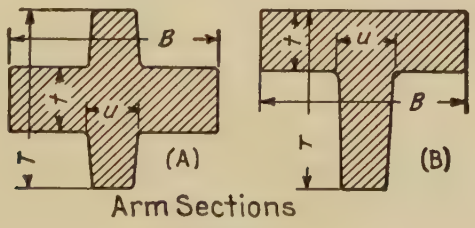

Fig. 152.

heavy spur gears and (*B*) on bevel gears. Arms of I section are also used on spur gears of great strength and diameter, the bar of the I being parallel to the axis of the wheel.

172. Empirical dimensions of oval arm gears may be taken as follows, for small gears. See Fig. 145. (h) is taken half way between hub and rim, the *area* of the ellipse being equal to 30% more than the area of cross-section of a tooth at the pitch line, that is $b \times \frac{P}{2} \times 1.3$. The taper of the arms is $\frac{1}{4}''$ per foot. The number of arms varies. Up to 60″ diameter 4 or 6 arms are used, depending on conditions. Over 60″ eight arms are used and over 80″ diam. ten arms. In no case should the max. distance between arms at rim exceed the length of arm measured from center to rim. Use other dimensions as given for ribbed arms in Fig. 153 gear (C).

For gears with ribbed arm section like 152(A) the following proportions are recommended:

B = width at rim (B_1) + $\frac{3}{4}''$ per ft. taper;

$B_1 = \frac{7.85}{p} = 2.5P$;

$T = \frac{3}{4}b$ (b = width of face of gear);

$C = \frac{1.57}{p} = \frac{P}{2}$, and is taken at the *edge* of the rim (Fig. 153).

$U = 0.3P$ to $0.4P = \frac{0.94}{p}$ to $\frac{1.25}{p}$;

$t = \frac{1.57}{p} = \frac{P}{2}$.

The length of the hub may be taken as $1\frac{1}{4}b$ or equal to $b + 0.025D$ (where D = pitch diam. of gear). (In Fig. 153 (gear C) D is the shaft diam.) Fig. 153 (gear C) shows the letters not given in Fig. 152.

The hub diameter may be taken as twice the shaft diameter when the shaft is of such a size (given below as d_0) as to carry a load proportional to the gear diameter. If the shaft on which the gear is to be mounted is larger than the above, the hub *thickness* may be made 0.2 ($d_0 + 0.5d$) where $d_0 = .08\sqrt{FR}$ (for W.I shaft). For (FR) see Art. 89 and Fig. 93 on page 104. The ribs or feathers on the sides of the arms should be tapered to facilitate drawing the pattern of the wheel from the sand in moulding.

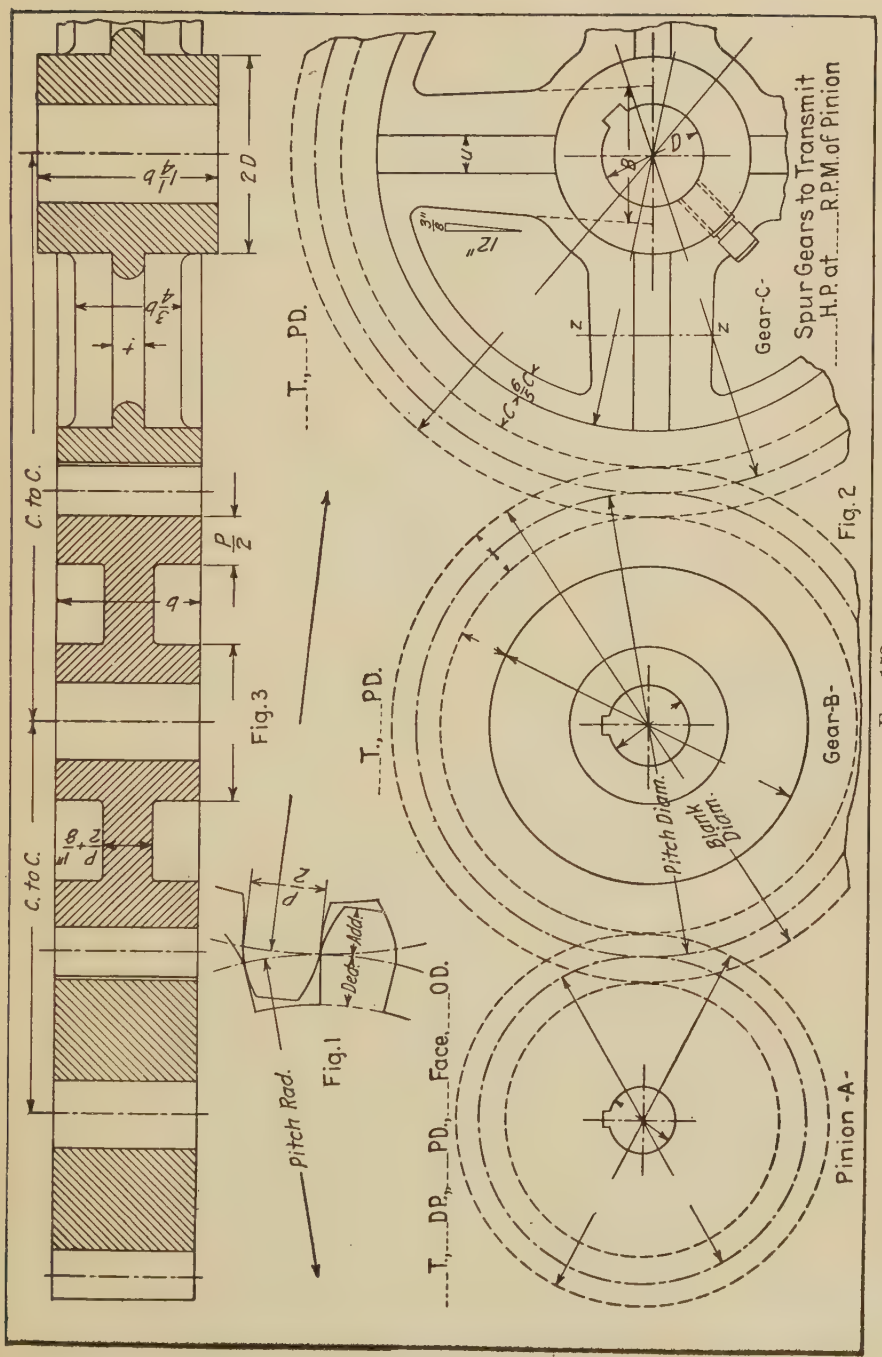
Spur Gears to Transmit
H.P. at R.P.M. of Pinion
Gear-C-
Fig. 2
Gear-B-
Pinion-A-
Pitch Diam.
Blank Diam.
T., PD.
T., DP., PD., Face, OD.
Fig. 1
Pitch Rad.
Add.
Ded.
Fig. 3
C. to C.
2D
12"
3/8"

FIG. 153.

The hub and rim should also be tapered as shown in Fig. 146 (Fig. *D*) for the same reason.

Sunk keys are used to fasten gears to shafts, a set screw being used only to prevent *end* movement of gear or key.

173. The preceding formulæ for arms of gears are empirical and based on theory combined with practice. The arms are subjected to bending due to the pressure on the rim and the force acting through the shaft at the center of the wheel.

If the arms are supposed to be fixed at the exterior of the hub and all the arms are loaded equally by the load on the teeth, the bending moment of one arm at the hub will be $F\frac{y}{n}$ where F = the load on a tooth at the pitch circle; y = distance from pitch circle to outside of hub, and n = number of arms. The load on the teeth can be obtained from the pitch, width of face, speed of rim, etc., as given in the "Lewis" or some other formula for strength of gear teeth. The resistance to bending depends on the shape of the arm section and the strength of material forming the arm. This resistance is usually expressed by the terms (fz). f = the unit stress allowed in bending and z = the modulus of the section (found in books treating mechanics of materials). Some values of z are given below for the common forms of sections.

The plane of bending is perpendicular to the surface of the page and parallel to the side of the page.

Form of Section.	Diagram of Section.	Area of Sec.	z.
Rectangle	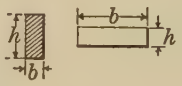	bh	$\frac{1}{6}bh^2$
Cross	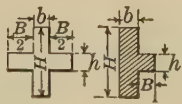	$bH+Bh$	$\frac{1}{6}H(bH^3-Bh^3)$
Ellipse		$\frac{\pi}{4}ba$	$\frac{\pi}{32}ba^2$

174. The strength of an elliptical arm is given in Art. 156, the pull (P) on the belt corresponding in gears to the pressure (F) on the teeth.

If (f) is taken at 3000 lbs. unit stress we have the following expression for the size of the elliptical arms.

$$\frac{FD}{2n}=\frac{\pi}{32}ba^2(3000). \quad \ldots\ldots\ldots \quad (1)$$

In this case y is taken as equal to $\frac{D}{2}$, giving the ellipse axes a and b at the center of wheel.

If $(b)=\frac{a}{2}$, this reduces to $\frac{FD}{n}=\frac{\pi a^3}{32}3000$, from which we have

$$a=\sqrt[3]{\frac{FD}{294n}}=.15\sqrt[3]{\frac{FD}{n}}. \quad \ldots\ldots\ldots \quad (2)$$

175. Applying this method to the calculation of an arm of + section gives us the width of the arm called (B) in Fig. 152. The strength of the arm is nearly all due to the part which is in the plane of bending, viz.: the plane of rotation of the wheel, the ribs being of very little value to resist the bending action.

If we disregard the ribs we have left to calculate a section, rectangular in shape, whose width (t) corresponds to (b) in the table of Art. 173, and (B) corresponds to (h), from which

$$\frac{FD}{2n}=fz=\tfrac{1}{6}fbh^2, \quad \text{or} \quad bh^2=\frac{3FD}{nf}. \quad \ldots\ldots \quad (1)$$

If the letters of Fig. 152 are substituted in (1) it will appear as $tB^2=\frac{3FD}{fn}$. As $(t)=\frac{P}{2}$ and (f) is taken equal to 3000 lbs. per sq.in., substitution gives $\frac{P}{2}B^2=\frac{FD}{1000n}$, from which

$$B=\sqrt{\frac{FD}{500Pn}}=.044\sqrt{\frac{FD}{Pn}}. \quad \ldots\ldots\ldots \quad (2)$$

This value of (B) is laid off at the center of the wheel as shown in Fig. 153 (C) and the arms are tapered towards the rim. The widths of the arm at the points where it joins the hub and the rim are to be given on the drawing in preference to (B) alone. The value of (F) must be calculated from the teeth dimensions by formula (3) in Art. 180.

The calculation for an arm of T section is made in a similar manner and dimensions are laid off on the drawing similarly.

176. Henry Hess gives the following formulæ for arm dimensions for spur gear wheels, in which the letters used are as follows:

Z = modulus of resistance of arm section,
P = circular pitch,
p = diametral pitch,
R = ratio of face width to circular pitch = $\frac{b}{P}$
f = face width,
N = number of teeth,
n = number of arms,

$$Z = \frac{P^3 R(N-7)}{50n}, \text{ for circular pitch, } \ldots \quad (1)$$

and

$$Z = \frac{\pi^3 R(N-7),}{50p^3 n} \text{ for diametral pitch. } \ldots \quad (2)$$

Applying these formulæ to arms whose cross-section is an ellipse having a minor axis (E) and major axis ($2E$) gives

$$E = \sqrt{\frac{(N-7)P^3 R}{20n}} = \sqrt{\frac{(N-7)P^2 b}{20n}}, \text{ for circular pitch } . \quad (3)$$

$$E = \sqrt[3]{\frac{(N-7)\pi^3 R}{20np^3}} = \sqrt[3]{\frac{(N-7)\pi^2 b}{20np^2}}, \text{ for diametral pitch. } \quad (4)$$

These are taken from The American Machinist Gear Book, by C. H. Logue, in which graphical charts are also given for their solution.

177. The weights of gear wheels are often estimated by some empirical rule which depends on the circ. pitch, width of face, etc. Reuleaux gives the following:

$W = 0.0357\ bP^2(6.25\ N + 0.04\ N^2)$ where b = face;
P = circular pitch;
N = number of teeth;
W = weight of gear blank. (Deduct 30% for finished wgt.)

As (P^2) is not found to be a correct factor and the values of the constants for the No. of teeth run parallel with the No. of teeth, etc., Mr. Logue finds the wgt. $W = N \times b \times K$ where (K) is a constant given for the pitch =

$$\frac{P^2}{1.58} \quad \text{or} \quad W = \frac{P^2}{1.58} \times N \times b. \quad . \quad . \quad . \quad . \quad . \quad (1)$$

This formula cannot be used for low numbers of teeth nor above $3\frac{1}{2}''$ circular pitch. Another formula from Machinery reduces to much the same as the preceding, being $W = K \times P^2 bN$. (K) is a coefficient which may be taken as 0.35 for pinions and 0.45 for gears, or if the diameter (D) is known and (P), the weight of pinion $= 3.1\ DP^2$. Weight of gear $= 4.2\ DP^2$.

The price of gears varies so much that a formula for calculating it cannot be given. The type of formula can be expressed as: Price = (coeff. $\times PN$ + coeff. $\times P$) the coeff. to be determined for each manufacturer. Cast iron cut gears cost about 20% more than cast teeth, and cast steel gears from 50% to 75% more than cast iron gears of the same size.

178. The efficiency of spur gears varies from 90% to 98% depending on the quality of workmanship, lubrication and material used. The teeth should be as near the perfect theoretical shape as possible, and mounted accurately and firmly in position. The lubrication should be continuous, of sufficient quantity and the gears should work in a closed casing. The material should be hard and close grained and different for the two gears. Hardened steel will give the best results with phosphor bronze. The pitch should be as fine as possible, without too wide a face, as this tends to increase the efficiency. Anything which tends to shorten the line of contact and confine it to the pitch point increases the efficiency.

179. Strength of Gear Teeth. The load which a gear transmits is divided among several teeth depending on the angle of approach and recess and on the quality of workmanship. The load might be brought on the corner of the top of one tooth and would tend to break that tooth along a surface running from the root of the tooth to some point on the top. This is shown in Fig. 154 by the portion *abcd*. As this would only occur in very badly fitted gears, the case of the load being uniformly distributed along the top of the tooth is the condition most used in calculations for strength. The tendency is then to break off the tooth along the surface (*abcd*) shown in Fig. 155.

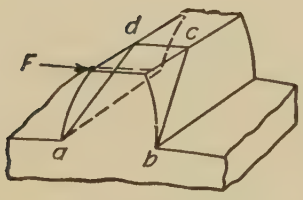

Fig. 154.

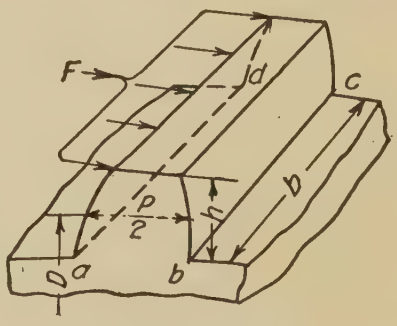

Fig. 155.

This surface is a rectangle whose sides are (b) the width of face and a side equal to the width of a tooth at the root which is nearly $\frac{P}{2}$. This value $\frac{P}{2}$ is too large for wheels having less than 24 teeth and too small for more than 24 teeth.

The bending moment of the force (F) will be (Fh) and the resisting moment at the root (fz). z is the modulus of the section (a rectangle) which is given in the table in Art. 173, as $\frac{1}{6}bh^2$. As (h) equals $\frac{P}{2}$ in Fig. 155, we have $z=\frac{1}{24}bP^2$.

In Art. 168 the involute system gives the depth of a tooth equal to $.6866P$, therefore $Fh=F\times.6866P$ and equating the bending moment and resisting moment gives $.6866FP=\frac{1}{24}bP^2f$, from which $F=0.607bPf$, or for any other system of gearing $F=kbPf$ where (k) is a variable which depends on the shape of the teeth, or on the number of teeth in the gear.

Mr. Wilfred Lewis, an American engineer, made a large number of experiments to determine the value of this variable (k) for the cycloidal system as well as the 15° and 20° involute systems, by drawing a large number of teeth and measuring their thickness at the root. From these measurements he evolved in 1893 what he calls a tooth factor. His formula was $F = SPby$, in which F = the load taken at the pitch point, S = the working stress in the material, b = the width of face, and y = the tooth factor. The tooth factor for 15° involute and cycloidal teeth $= \left(0.124 - \frac{0.684}{N}\right)$, for 20° involute teeth $y = \left(0.154 - \frac{0.912}{N}\right)$. For radial flanks $y = \left(0.075 - \frac{0.276}{N}\right)$. N = number of teeth.

Below will be found a table of values of (y) calculated from these formulæ for various numbers of teeth.

VALUES OF FACTOR (y)

No. of Teeth.	y			No. of Teeth.	y		
	Involute, 20°.	Involute, 15°. Cycloidal.	Radial Flanks.		Involute, 20°.	Involute, 15°. Cycloidal.	Radial Flanks.
12	0.078	0.067	0.052	27	0.111	0.100	0.064
13	0.083	0.070	0.053	30	0.114	0.102	0.065
14	0.088	0.072	0.054	34	0.118	0.104	0.066
15	0.092	0.075	0.055	38	0.122	0.107	0.067
16	0.094	0.077	0.056	43	0.126	0.110	0.068
17	0.096	0.080	0.057	50	0.130	0.112	0.069
18	0.098	0.083	0.058	60	0.134	0.114	0.070
19	0.100	0.087	0.059	75	0.138	0.116	0.071
20	0.102	0.090	0.060	100	0.142	0.118	0.072
21	0.104	0.092	0.061	150	0.146	0.120	0.073
23	0.106	0.094	0.062	300	0.150	0.122	0.074
25	0.108	0.097	0.063	rack	0.154	0.124	0.075

The value of (S) in the formula depends on the material of the teeth and on the velocity of the teeth. The load on a tooth must be reduced as the speed increases on account of the impact.

If the working stress allowed when the wheel is at rest, called static stress, is multiplied by $\frac{600}{600+V}$, the result will be the allowable working stress (S) when the velocity of a point on the pitch circle is (V) ft. per min. This multiplier was introduced by

Carl G. Barth and gives nearly the same result as the table originally given by Mr. Lewis for the working stresses for different speeds of teeth. If the static stress S_s at (0) velocity is taken as unity, the following table gives the multipliers for finding the working stress to use for different speeds when modified by the expression $\frac{600}{600+V}$. The value of the static stress S_s may be taken as follows:

Cast iron, ordinary workmanship	= 6,000	S_s.
" high grade workmanship	= 8,000	
Steel, ordinary workmanship	=15,000	
" high grade workmanship	=20,000	
Phosphor bronze, ordinary workmanship	= 9,000	
" " high grade workmanship	=12,000	

TABLE OF STRENGTH FACTORS

Vel. in ft. per min. = V	0	100	200	300	450	600	900	1200	1800	2400
Strength factor.....	1.0	.857	.75	.666	.571	0.5	0.4	0.333	0.25	0.2

180. The formulæ for calculating teeth for various speeds will be found below in their proper order for consecutive calculations.

(1) *To Find Velocity per Min. at Pitch Circle,*
Multiply together the pitch diam. in inches (D), the R.P.M. (R), and 0.262 or $V=0.262DR$.

(2) *To Find Allowable Unit Stress at Given Velocity,*
Multiply the allowable static stress by 600 and divide by the velocity in ft. per min.+600 or $S=S_s\times\frac{600}{V+600}$.

(3) *To Find Safe Tangential Load at Pitch Circle,*
Multiply together the allowable unit stress for the given velocity, the width of face, the circular pitch and tooth factor or $F=SPby$.

(4) *To Find Max. Safe Horse Power,*
Multiply the safe load at the pitch line by the velocity of pitch circle in feet per minute and divide by 33,000 or
$$\text{H.P.}=\frac{FV}{33000},$$

181. A rule for the width of face (b) of a gear suggested by an English engineer and giving good results in practice is as follows: $b = \frac{0.15\sqrt{V}+9}{p}$, that is, multiply the sq. root of the velocity of the pitch line in feet per min. by 0.15, add 9 to the product and divide by the diametral pitch. The width of face in practice varies from 2 to 8 times the circular pitch with 3 as a fair average for gears moving rapidly and having cut teeth.

The speed of gear teeth is limited by the noise they make. This noise is objectionable when ordinary cut gears are run at a higher velocity than 1200 ft. per min. at the pitch line. 2000 ft. per min. is about the practical pitch line speed limit, although gears of special design may run even higher than this. The maximum speed to avoid fracture would be for different gears somewhat as follows:

4,000 ft.	per	min.	for	C. I. of	8,000 lbs.	per	sq.in. sta. strength
8,000	"	"		Cast St. of 16,000	"	"	"
10,000	"	"		Mach. St. of 25,000	"	"	"

The gears to attain such speeds must be exceptionally accurate and well balanced. A formula giving the safe speed depending on the number of teeth in contact (n), circular pitch (P) and a factor (k) is given below. For general use the estimated factor is also given. Safe speed $= Pnk$.

Style of Gear.	Value of (k).
Spur Gear, pattern molded	0 to 300
" " , machine "	110 to 450
" " , commercial cut	600
" " , with exact cutters	700
" " , cut stepped teeth	820
" " , fiber	900
" " , rawhide	1000

The number of teeth in contact may be found graphically by dropping perpendiculars from the centers of the gears to the line of pressure. If the points of intersection of these perpendiculars with the line of pressure fall *outside* the points where the addendum circles cut the line of pressure, the No. of teeth between the latter points is used. If they fall *inside*, the No.

of teeth is taken between the feet of the perpendiculars. The distance between the points divided by the circular pitch gives the No. of teeth in contact approximately.

182. In making calculations for gear tooth strength the *smallest* gear in the train must be calculated if all the gears are of the same material. The teeth of small gears are weaker than wheels having the same pitch but a greater number of teeth, as will be evident by inspecting the tooth factor in the *Lewis* formula. If the pinion can be made of a stronger material than the gear which meshes with it, then the calculation for the tooth strength will be based on the material of the larger wheel.

183. Gear calculations can be simplified by the use of diagrams, especially in cases where the first calculation to find the pitch of a gear is only an approximation to the final result. Fig. 156 is a diagram for finding the value of (S) in the Lewis formula when the static strength of the material is known and the velocity at the pitch circle in ft. per min. It is often required to find the pitch when the pitch diameter and speed of pitch circle are known but the number of teeth is unknown. The face of the gear is known or assumed by Art. 181. If the Lewis formula is used for 15° involute or cycloidal systems then

$$F = SPby = SPb\left(.124 - \frac{.684}{N}\right),$$

but

$$p = \frac{\pi}{P} \quad \text{or} \quad P = \frac{\pi}{p},$$

$$\therefore \quad F = b \times \frac{\pi}{p} \times S\left(.124 - \frac{.684}{Dp}\right),$$

or

$$F = bS\left(\frac{.389}{p} - \frac{2.15}{Dp^2}\right).$$

If we call $(w) = \frac{F}{b}$ = the load per inch width of face of gear and substitute in the last expression, we have

$$w = S\left(\frac{.389}{p} - \frac{2.15}{Dp^2}\right), \quad . \quad . \quad . \quad . \quad . \quad . \quad . \quad . \quad (1)$$

from which

$$p = \frac{S}{w}\left(.194 \times \sqrt{.038 - \frac{2.15w}{SD}}\right). \quad . \quad . \quad . \quad . \quad (2)$$

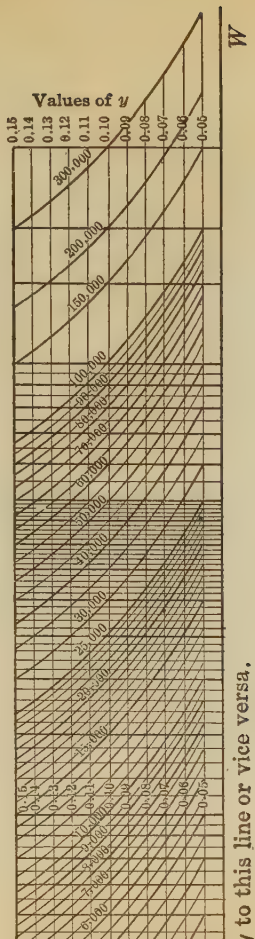

Values of Factor (y)

No. of Teeth	y Involute 20°	y Involute 15° Cycloidal	y Radial Flanks	No. of Teeth	y Involute 20°	y Involute 15° Cycloidal	y Radial Flanks
12	0.078	0.067	0.052	27	0.111	0.100	0.064
13	0.083	0.070	0.053	30	0.114	0.102	0.065
14	0.088	0.072	0.054	34	0.118	0.104	0.066
15	0.092	0.075	0.055	38	0.122	0.107	0.067
16	0.094	0.077	0.056	43	0.126	0.110	0.068
17	0.096	0.080	0.057	50	0.130	0.112	0.069
18	0.098	0.083	0.058	60	0.134	0.114	0.070
19	0.100	0.087	0.059	75	0.138	0.116	0.071
20	0.102	0.090	0.060	100	0.142	0.118	0.072
21	0.104	0.092	0.061	150	0.146	0.120	0.073
23	0.106	0.094	0.062	300	0.150	0.122	0.074
25	0.108	0.097	0.063	rack	0.154	0.124	0.075

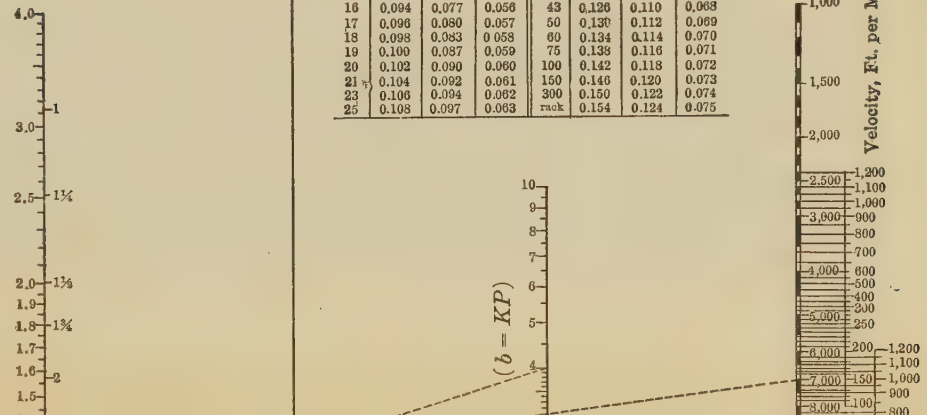

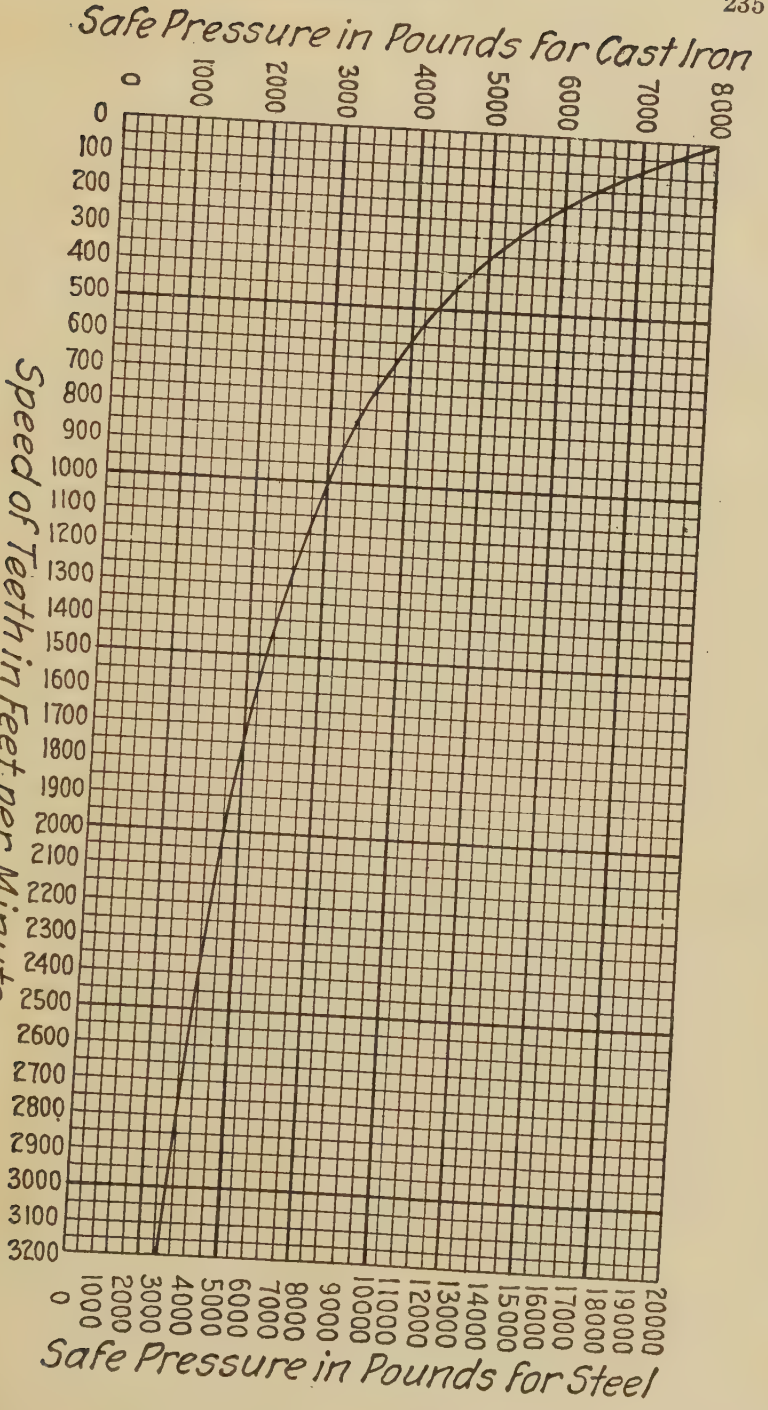
Safe Pressure in Pounds for Cast Iron
0
1000
2000
3000
4000
5000
6000
7000
8000
Speed of Teeth in Feet per Minute
0
100
200
300
400
500
600
700
800
900
1000
1100
1200
1300
1400
1500
1600
1700
1800
1900
2000
2100
2200
2300
2400
2500
2600
2700
2800
2900
3000
3100
3200
0
1000
2000
3000
4000
5000
6000
7000
8000
9000
10000
11000
12000
13000
14000
15000
16000
17000
18000
19000
20000
Safe Pressure in Pounds for Steel

FIG. 156.

Fig. 157 from Kimball and Barr's Machine Design is based on formula (1) above and enables the diametral or circular pitch to be easily found when the width of face (b) is known, the diameter of the pitch circle (D), the stress allowed in the teeth (S) (found from Fig. 156) and the load (F) on the teeth.

Enter the diagram at load (w) per inch of face on scale (C) come down vertically to the inclined line denoting the stress allowed (S), called P in diagram). Run along horizontally from this point to meet the vertical line erected from the gear diameter at the bottom of the diagram at scale (D). The curved line nearest to this point of intersection indicates the nearest diametral pitch.

Diagram Fig. 158 was designed by Mr. H. L. Seward to facilitate calculations involving strength of gears based on the Lewis formula. The directions for its use appear on the diagram. The values of (S) have not been modified by the term $\frac{600}{600+V}$, but remain as originally given by Mr. Lewis. In this diagram the width of face can be determined for any given pitch in terms of the pitch as $b=KP$ either (P) or (K) being changed to suit the design of gear under consideration. The rule for width of face given in Art. 181 may be used as a trial width.

184. The horse-power transmitted by a train of gears depends on the load on the teeth, the velocity of the pitch circle in ft. per min. and the efficiency of the gears. A single pair of gears will transmit H.P. $=\left(\frac{V\times F}{33000}\right)\times 90$ to 98% depending on the grade of workmanship and fitting together.

The velocity (V) is taken in ft. per min. as $V=\frac{\pi DN}{12}$, where D = pitch diam. in inches, N = R.P.M.
(F) = force on teeth at pitch line obtained from the Lewis formula.

185. The problem of finding the velocity ratio of a pair of gears is the same as for two pulleys (Art. 152). To compute the speed ratio of the first and last gears in a train use the continued product of all the drivers as a single driver and the continued product of all the followers as a single follower and proceed as above. If an idler is placed in the train it does not need to be considered, for it figures both as a follower and a driver.

In designing gear trains it is best to divide the reduction as evenly as possible among the different pairs of gears forming the

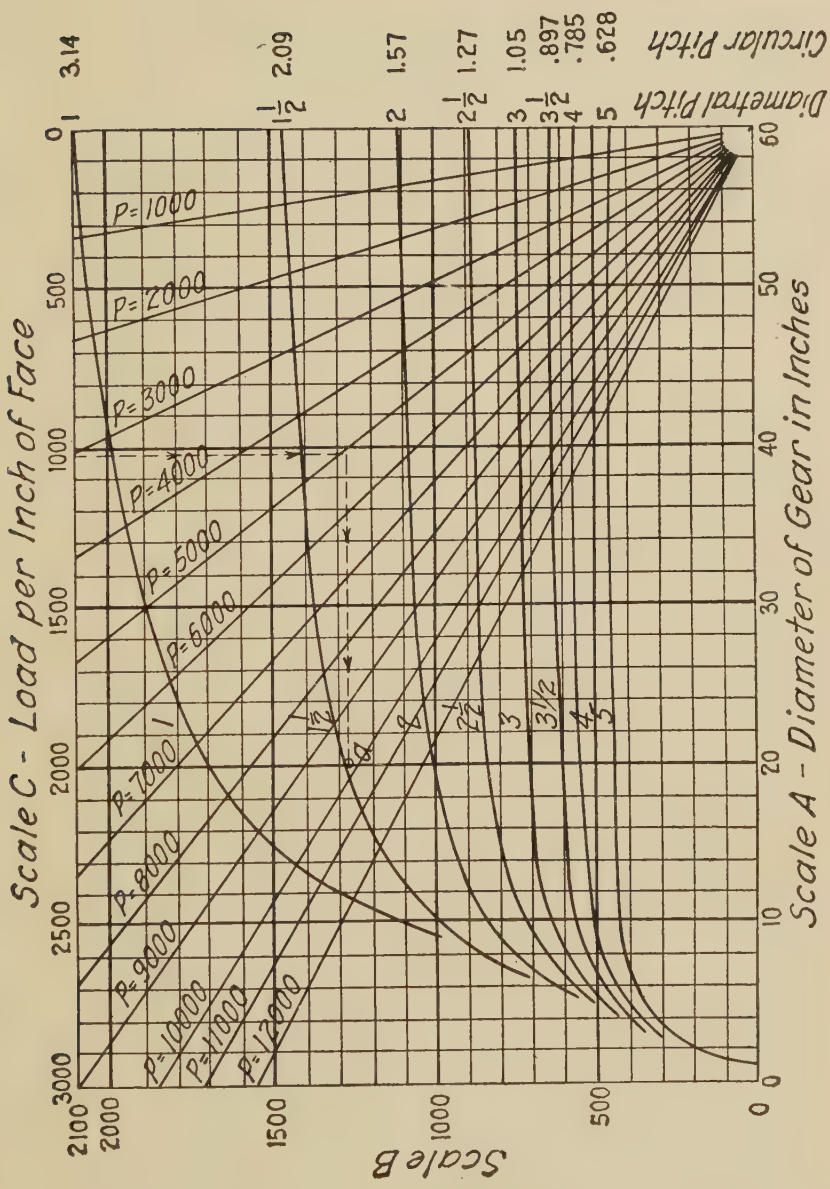
Scale C - Load per Inch of Face
Scale A - Diameter of Gear in Inches
Scale B
Diametral Pitch
Circular Pitch
P=1000
P=2000
P=3000
P=4000
P=5000
P=6000
P=7000
P=8000
P=9000
P=10000
P=11000
P=12000
0
500
1000
1500
2000
2500
3000
2100
10
20
30
40
50
60
1
1½
2
2½
3
3½
4
5
3.14
2.09
1.57
1.27
1.05
.897
.785
.628

FIG. 157.

train. For a reduction of say 64 if two sets of gears were used the reduction in each set would be $\sqrt{64}=8$ whereas in a triple reduction, the reduction in each set would be $\sqrt[3]{64}=4$. That is, three pairs of gears would be used, each pair having a velocity ratio of 4 to 1.

186. The relative powers of a train of gears are inversely porportional to the velocity of their pitch circles. In a drum and gear hoist as shown in Fig. 159 we have a pulley (G) on a countershaft which belts to pulley (F) on the shaft of gear (A). Gear (A) meshes with an idler (B) which turns a gear (C) and the drum (D) to which (C) is rigidly connected. If the drum is rotated it takes up or lets out the rope which is fastened to the weight (W), thus raising or lowering it. The load (W) on the rope produces a pressure (F) on the teeth of gear (C) inversely proportional to the lever arm of the gear, or $W\times$rad. of drum$=(F)\times$rad. of gear (C). The pressure on the teeth of (B) to turn (C) will be greater than (F) on account of the friction between the teeth. If the frictional loss of each pair is 5% then we will need 10% more power in gear (A) than is required to raise the weight (W). That is, the teeth of the gears must be proportioned to stand 10% more than the load (F) requires.

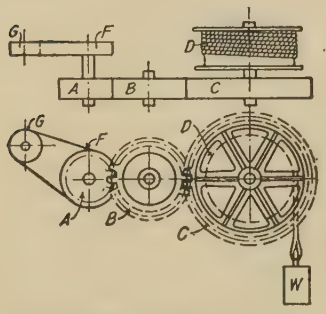

FIG. 159.—Hoisting Train.

The horse-power (H_1) supplied at the pulley (F) to the gear shaft is decreased 10% by frictional resistance before the drum is reached, therefore,the power available to raise the weight is 10% less than the initial horse-power,

or

$$H=.9H_1,$$

that is,

$$\frac{WV}{33000\times.9}=H_1=\frac{FV_1}{33000},$$

$V_1=$the velocity of pitch circle of gear (A), and
$F=$load on teeth, of (A)
$V=$velocity of wgt. (W).

From this equation $\frac{WV}{.9}=FV_1$. If (V) is known the R.P.M. of

the gear (*A*) are known and the velocity ratio of (*D*) and (*A*) can be determined. From this the diameter of gear (*A*) can be found, if (*C*) is assumed, which will give at once the load (*F*) on the gear teeth, enabling the pitch to be determined for all gears which run together.

A more extended study of gear transmission will be found in the following books, which have been consulted in preparing this brief treatise.

Spur Gearing, Machinery Reference Series No. 15.
Elements of Machine Design—Part 1, by W. C. Unwin.
American Machinist Gear Book, Charles H. Logue.
Elements of Machine Design, Kimball and Barr.
Mechanical Engineers' Pocket Book, Kent.

INSTRUCTIONS

Spur Gearing

Three two hour exercises, No. 3 paper, allowed in class, scale half size. Total time req'd on pl. is 7 hrs. The gears shown in Fig. 153 are to be drawn in the reverse position to that shown, that is, (*A*) and (*C*) change places. If any change is made in vertical arrangement it must be by moving the center of the *pinion* towards the top of the paper. Its pitch circle must be kept in contact with the pitch circle of (*B*). Fig. 1 may be omitted but the remaining figures are to be drawn, also a section of oval or + arms.

The pitch diameters of (*A*), (*B*) and (*C*) will be respectively ( )″, ( )″, ( )″. *A* is to be a pinion in all cases. If the diam. of (*B*) is 13″ or more it is to have *oval* arms, 4 or 6 in number. (*C*) is to have + shaped arms, the number being (*n*) in the assignment table.

The diametral pitch (*p*) is ( ). The width of face b = ( )″. The diameters of the shafts in wheels (*A*) and (*B*) are to be calculated from Art. 89 using a value of (f) = 13,500. That in wheel (*C*) from formula in Art. 172 increased by $\frac{1}{2}$″. The gears are of cast iron. Keyways to be shown and dimensioned in all gears. Use the empirical formulæ for oval arms given in Art. 172 or 176 for drawing the arms, then calculate the strain (f) in the arms by using formulæ in Art. 174.

For + arms use formulæ in Art. 172 for drawing, then calculate the stress (f) for the arms, using formulæ in Art. 175. The hub diameters may be taken as twice the shaft diameters except in the wheel

(*C*) where + arms are drawn. Then take the hub diameter as indicated in Art. 172, since the shaft diameter will be larger than that necessary to transmit the power from the gear alone.

Take the set screw diam. $=\frac{3}{4}''$ for all cases. Give the dimensions indicated on the drawing in Fig. 153, also the distance c. to c. of shafts of each pair of gears, the depth from top of teeth to inside of rim, diam. and length of set screw, diam. of hubs, width of arm at rim and at hub.

For each gear make a note giving the following— *T*, — *DP*, — *PD*, — Face, — *OD*. Also make a table giving the data for cutting all three gears as illustrated in Art. 169.

Calculate the H.P. which the gears will transmit based on the pinion teeth when the pinion makes ( ) R.P.M. (given in assignment table) and when the friction loss is 5 per cent between pinion and gear (*C*). See Art. 180.

Calculate the weight of each gear, giving the name of formula used.

ASSIGNMENT TABLE FOR SPUR GEAR PLATE

		1	2	3	4	5	6	7	8	9	10	11	12	13	14	15
Pitch diam. of	*A*	8	8	8	12	12	8	8	8	9	9	9	9	8	8	8
	B	12	12	12	16	16	12	12	12	14	12	13	14	12	12	12
	C	32	32	32	36	38	32	24	24	34	32	33	32	32	32	32
	p	2	$1\frac{3}{4}$	$1\frac{1}{2}$	$1\frac{1}{4}$	$1\frac{1}{2}$	$2\frac{1}{4}$	$2\frac{1}{2}$	$2\frac{3}{4}$	3	2	2	2	$2\frac{1}{4}$	$1\frac{1}{2}$	$1\frac{3}{4}$
No. of arms.	*n*	4	6	6	6	6	4	4	4	6	4	4	4	4	4	4
Face	*b*	$4\frac{1}{2}$	$5\frac{1}{2}$	6	$7\frac{1}{2}$	6	4	4	$3\frac{1}{2}$	3	$4\frac{3}{4}$	$3\frac{1}{2}$	$3\frac{3}{4}$	$3\frac{3}{4}$	$5\frac{3}{4}$	$5\frac{1}{8}$
R.P.M.	*i*	200	215	242	200	190	210	220	200	190	200	190	180	170	190	180

Example. A student who has column (1) draws an 8″ pinion, 12″ gear (*B*), 32″ gear (*C*). Diam. Pitch = 2. Gear (*C*) has 4 arms. Width of face of all gears equals $4\frac{1}{2}$ inches. R.P.M. of pinion to be 200.

Gear Train Design

Prob. 1. In Fig. 159 of the text is shown a train of hoisting mechanism. The table below gives the dimensions of the pulleys and gears, the R.P.M. of (*G*) and the weight of (*W*) in pounds. It is required to determine the circular and diametral pitches necessary to use in these gears when they are made of cast iron. The efficiency of the gears is taken as 95%. Determine the number of teeth in each gear, its outside diam. and width of face. The width of face is to be assumed as given below the following table.

TABLE FOR SPUR GEAR TRAIN CALCULATIONS

	1	2	3	4	5	6	7	8	9	10	11	12	13	14	15
G, Diameter	40	39	40	39	40	38	38	38	39	37	36	35	34	32	30
F, "	20	20	19	19	18	20	19	18	18	20	18	17	16	15	17
A, "	. . .	. . .	. . .	8″	for	all	cas	es							
B, "	. . .	. . .	. . .	12″	for	all	cas	es							
C, "	. . .	. . .	. . .	32″	for	all	cas	es							
D, "	. . .	. . .	. . .	48″	for	all	cas	es							
R.P.M. of *G*	100	110	115	120	125	130	150	160	170	180	190	200	210	220	200
Pounds lifted . . .	470	600	700	560	650	490	500	520	540	620	700	800	900	700	800

The width of face of gears to be (3 times *P*) for those men who have a small (*a*) after the number of column given them.

Those with small (*b*) use face width $=2\frac{1}{2}P$
" " (*c*) " " $=2P$
" " (*d*) " " $=3\frac{1}{2}P$
" " (*e*) " " $=2\frac{1}{4}P$
" " (*f*) " " $=2\frac{3}{4}P$

Prob. 2. Calculate the proper diametral pitch to use on two gears (*A*) and (*B*) of the above table if (*A*) makes the R.P.M. given for (*C*) and the load on the teeth is twice the number of lbs. given in the last line. Use the Lewis formula and width of face as proportioned by one of the small letters *a*–*b*–*c* above. Work from the smaller gear always.

Prob. 3. What should be the pitch and width of face of a steel pinion 4″ pitch diam. 15° involute system making 750 R.P.M. and transmitting 10 H.P. The workmanship is high grade. The width of face is to be proportioned according to Art. 181.

Prob. 4. A 16 tooth pinion of $1\frac{1}{4}$″ pitch and $3\frac{1}{4}$″ face drives a 75 tooth wheel at a speed of 200 ft. per min. The tooth is 15° involute.

(*a*) Find their working strength if both gears are cast iron.

(*b*) Find the strength if pinion is made of steel and wheel of C. I.

(*c*) Find the horse-power of both combinations.

Prob. 5. A pair of 20° involute gears transmit 8 horse-power. The distance between centers is 12″ and velocity ratio is 3 to 5. If pinion shaft makes 200 R.P.M. and face width is $1\frac{3}{4}$″ find the pitch and number of teeth on the gears.

Prob. 6. A C. I. gear makes 120 R.P.M. and transmits 20 horse-power. The pitch diam. $=30$″. What will be (*a*) its diametral pitch and (*b*) its number of teeth?

Prob. 7. A C. I. gear 44″ diam. is to transmit 21 H.P. at 50 R.P.M. If the diametral pitch is 2.5 find the least width of face.

Prob. 8. What gears will be required to lift a load of 2400 lbs. at a uniform rate of speed employing a 10 horse-power motor, running at 1120 R.P.M. driving with a rawhide pinion 4″ pitch diameter. (Safe static stress = 5000). Hoisting drum diameter = 10″.

Prob. 9. A load of 2400 lbs. is to be raised at a uniform speed of 115 ft. per min. What size motor and gears will be required?

Test No. 8. Arts. 116–186.

$3\frac{1}{2}$ Hours allowed.

1. An engine with 12″ bore, 14″ stroke, carries steam at 100 lbs. pressure. The connecting rod is 40″ long. Calculate the following dimensions:

(*a*) Diam. of piston rod (outside). ($f_t = 4500$). 10 threads per in.

(*b*) Area of crosshead bearing surface in inches (press. per inch allowed = 30 lbs.).

(*c*) Diam. and length of crosshead pin (bearing pressure = 1200 lbs. per inch). Pin to have a length = $1\frac{1}{4} \times$ diam.

(*d*) Diam. and length of crank pin (bearing pressure = 1000 lbs. per inch). Length of pin = $1.5 \times$ diam.

(*e*) Calculate diam. of crank shaft when $f_s = 9000$;

$$FR = \frac{D^3 f_s}{5.1}.$$

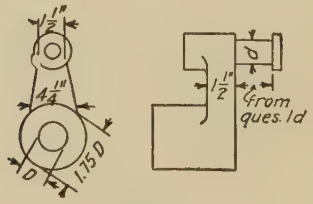

Fig. A.

(*f*) If the crank has the dimensions of (Fig. A) find the value of (*f*) when

$$f = \frac{3(B + \sqrt{B^2 + T^2}}{W^2 t}.$$

2. Two pulleys are 34″ and 20″ diam. and their centers are 36′–0″ apart. What H.P. will be transmitted if the larger pulley makes

110 R.P.M. and the initial tension is 460 lbs. $\mu = .3$. How wide a belt will you use?

$$\text{Log}\frac{T_t}{T_s} = 0.007578\mu\theta \quad \theta = 180° - 2\phi. \qquad \sin\phi = \frac{R-r}{\quad}. \qquad T_t + T_s = 2T_t.$$

3. A hoist is composed of two C.I. gears and drum placed as shown in the accompanying sketch (Fig. B). The maximum load to be

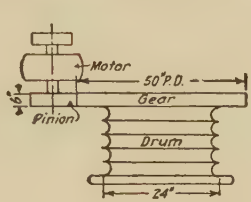

FIG. B.

hoisted is 5000 lbs. at 200 ft. per min. The max. R.P.M. of motor pinion to be 400. Find the diametral pitch of the gear teeth, the diam. of pinion and number of teeth in each gear, also the H.P. of motor.

CHAPTER XVI

BEVEL GEARS

187. In the preceding chapter, gears have been considered whose axes of rotation were parallel. The teeth were constructed on cylinders and the line of contact was parallel to the axes of rotation.

The pitch had a constant value for the entire length of the tooth. If the axes of two shafts which carry a pair of gears are intersecting instead of parallel, the pitch surfaces of the gears change from cylinders to cones. These pitch cones have a common vertex at the point of intersection of the shafts. The teeth formed on these cones must then be changed from those found on spur gears and will be found to change in width as the vertex of the cone is approached. The shape of the teeth will be clearly seen by reference to Fig. 161. The portion of the slant side of the pitch cone used for teeth is not more than $\frac{1}{3}$ and is measured from the base of the pitch cone towards its vertex.

The shafts (A) and (B) in Fig. 160 meet at (O) and the bevel gears connecting them are represented by (F) and (F_1). (C) and (C_1) are the respective pitch cones whose vertices lie at (O).

The large ends of the teeth lie on the surface of the sphere shown by the dotted circle, but it is difficult in practice to lay them out as spherical. A method which gives a sufficiently close approximation substitutes for the sphere the surface of two cones, called normal cones, whose sides are perpendicular to the sides of the pitch cones. Their vertices are at (O_1) and (O_2) but their bases are coincident with those of the pitch cones. This method is called Tredgold's Approximate Method. By developing the surface of a normal cone we show the ends of the bevel teeth lying in it so that they look like spur gear teeth on a cylinder whose radius is the same as the slant height of the normal cone. (R_1) and (R_2) in Fig. 160 show the radii of the developed

normal cones containing the big ends of the teeth on gears (F) and (F_1).

In this position the teeth are constructed precisely as though they were spur gear teeth on a wheel of radius (R_1) or (R_2). The circular pitch is the same as that lying in a circle whose diameter (D) is that of the base of the pitch cone. The diametral pitch is the same also but the *number of teeth governing the selection of a cutter* is obtained from the circle whose diameter is ($2R_2$). So also if the cycloidal system of teeth is used and Grant's Odontograph Table employed to draw the tooth outline, the *number of teeth in the circle* ($2R_2$) must be used in that table.

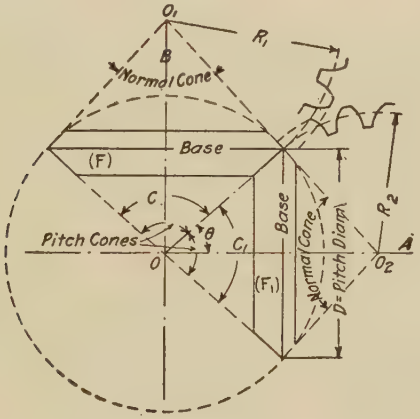

Fig. 160.

188. Shafts intersect at so many angles that a great variety of combinations of pinion and gear occurs in practice. The velocity ratio may vary with each angle of shaft intersection so that a proper knowledge of how to lay out bevel gears must comprise a great variety of cases. They are fortunately so much alike that a knowledge of the general method involved in laying out one will be sufficient for the others.

The velocity ratio and angle between the shafts are usually given so that the first determination will be the pitch cone angle (θ). In Fig. 161 (Fig. 1) is a diagram for finding (θ) when the angle (α) between two shafts (A) and (B) is known as well

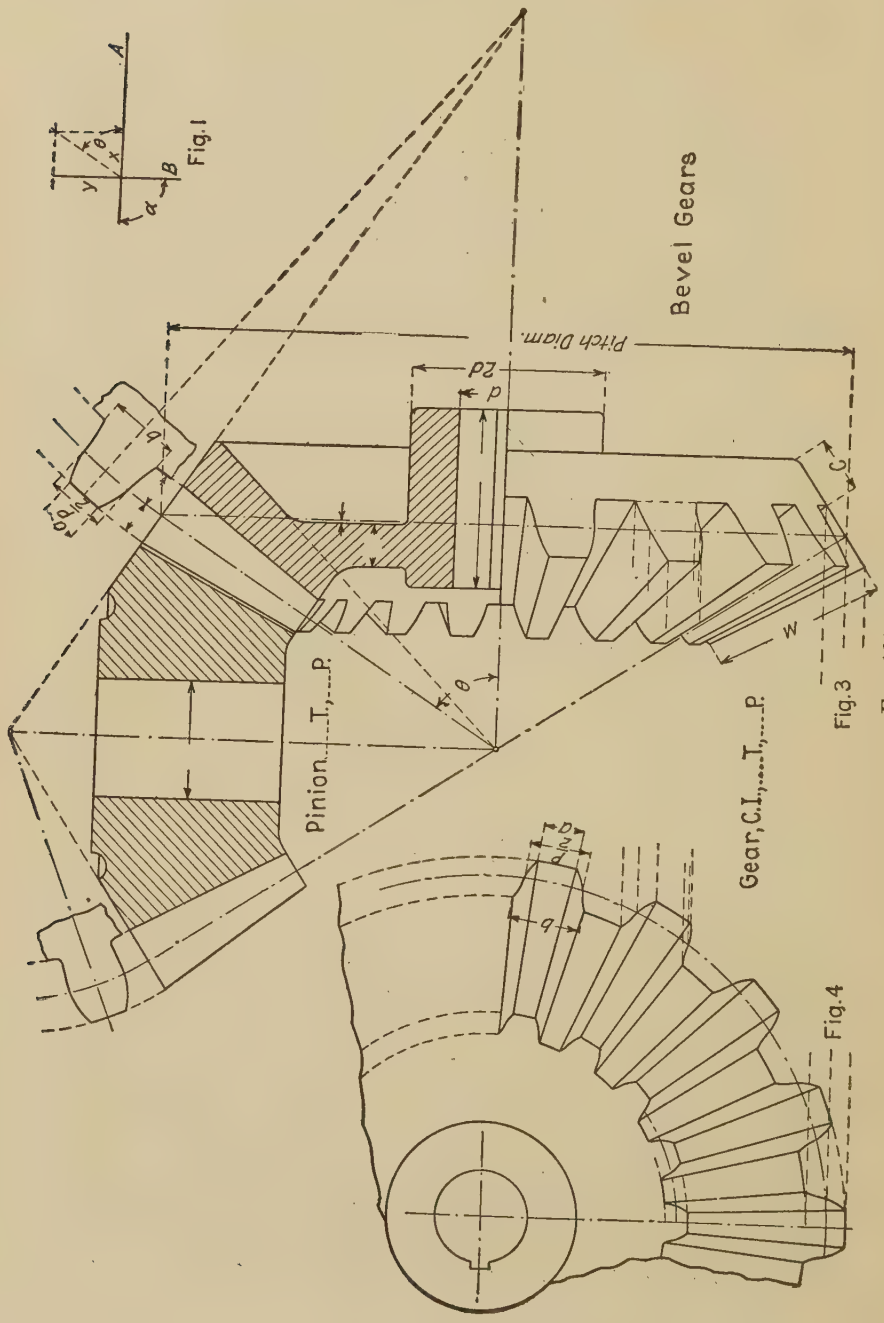
Bevel Gears
Pitch Diam.
2d
d
Pinion T., P.
Gear, C.I., T., P.
Fig.1
Fig.3
Fig.4
A
B
x
y
θ
α
b
C
W

FIG. 161.

as the velocity ratio (x) and (y) between the two shafts. That is (A) makes (y) R.P.M. and (B) makes (x) R.P.M.

If a parallelogram is formed as shown, the diagonal will be the common element of the pitch cones which will roll in contact at the required velocity ratio. This diagram might better be laid off on the lines of the two shafts themselves at the point where the gears are to be drawn to save the trouble of transferring θ from Fig. 1 to Fig. 3 (see Fig. 161).

In Fig. 162 are shown a number of styles of gear pairs as they often occur with various angles (α) and various velocity ratios.

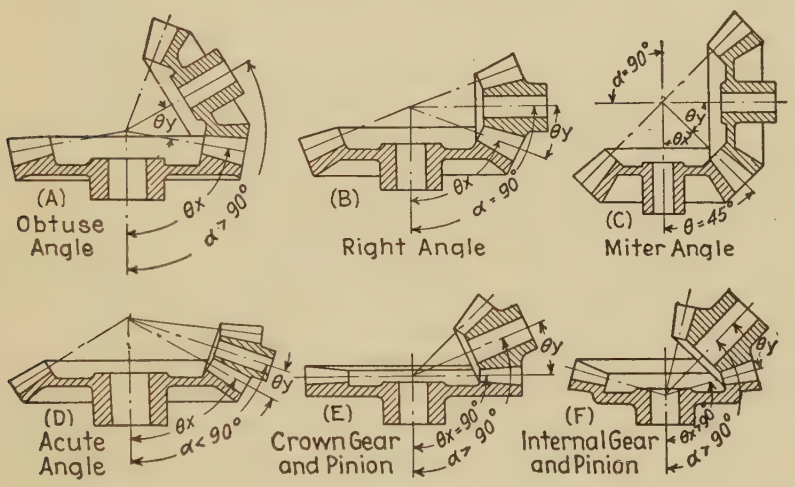

Fig. 162.

Fig. 161 represents the type of intersecting shafts shown at (B) Fig. 162.

189. After finding (θ) for the pitch cone the diameter of one gear may be assumed and laid off perpendicularly to its own shaft axis at a point which will permit the diameter to form the base line of its pitch cone. From the end of this pitch diameter lying on the common element of the two gears a perpendicular can be dropped to the axis of the other gear which will give the pitch radius of that gear. The normal cones of each gear can then be drawn and their vertices determined. From these vertices as centers, circles are drawn with the slant heights of the normal

cones as radii (See Fig. 160). On these circles as pitch circles teeth are laid out in the same manner as for spur gears. By swinging these teeth back to their respective normal cones the depth of teeth at the big end is shown and lines are drawn to the vertices of the pitch cones. The length of face of the teeth is laid off on the pitch cone, thus fixing the depth of tooth at the small end. If it is desired to show the teeth in end view (Fig. 4 of Fig. 161) the circles passing through the tops, bottoms and pitch points can be drawn for both big and little ends. On the circles for the big end lay off first distances on the pitch circle equal to half the circular pitch, then on addendum and dedendum circles respectively the width of the teeth at top (a) and bottom (b), working each side of the center lines of the teeth. From these points lines are drawn towards the center of the shaft stopping at their intersection with the corresponding addendum, dedendum and pitch circles of the little end. Curves are then put in through the points thus laid out, to give the outlines of the ends of the teeth. The lower half (outside view) of Fig. 3 is then determined by projecting the points of Fig. 4 back to Fig. 3. The lines representing the top edges as well as the bottoms of the teeth are conical elements and pass through the point of intersection of the shafts.

190. The thickness of rim is the same as for spur gears and is taken at the big end of the teeth. The inside surface of the rim is a conical surface with vertex at the pitch cone vertex. If a web is used to connect rim and hub, its thickness may be taken as $\frac{P}{2}+\frac{1}{8}''$. If arms are used they are made like those shown for spur gears of the ⊥ cross section. (See Fig. 152, B.) The dimension (B) is taken in the plane of rotation of the wheel. The feathers of these arms are placed on the side of the arm towards the big end of the gear and support that part of the rim between the arm and end of tooth. The hub and shaft diameters are obtained from the proportions of the gear by the same method used for spur gears. The load (F) acting at the rim to produce bending of the arms at the circumference of the hub is obtained from the " Lewis " formula modified as follows:

For the circular pitch use the circular pitch of the teeth at the center of their length, that is, a mean circular pitch. For the tooth factor (y) use the number of teeth in the circle which has the slant

height of the normal cone as a radius. In finding a value for (S) use the velocity of the pitch point half way between big and little ends.

The width of face of a bevel gear according to Brown and Sharpe should not exceed $5P$ or $\frac{16}{p}$, where P = circular pitch, p = diametral pitch. Neither should the width of face exceed $\frac{1}{3}$ the pitch cone slant height. Having found (F) the load on the teeth (Art. 193) and its lever arm, which is

$$\frac{D_l+D_s}{4}$$

where (D_l = pitch diam. at large end, D_s = pitch diam. at small end, the bending moment on an arm becomes

$$\frac{F}{n}\left(\frac{D_l+D_s}{4}\right),$$

where (n = number of arms = $.55\sqrt[4]{P \times \text{No. of teeth}}$). The resisting moment of an arm of $\perp$ section = $\frac{S_1 t b^2}{6}$ (neglecting the rib). (S_1 = allowable unit stress in the material of the arm.) Since the expression for bending moment equals the moment of resistance, we have

$$\frac{F}{n}\left(\frac{D_l+D_s}{4}\right)=\frac{S_1 t B^2}{6}$$

from which B can be obtained.

The diameter of shaft and hub are calculated like those on a spur gear. The length of hub may be from 1 to $1\frac{1}{4}$ the width of face. The hub on the side of the gear towards the small end should not project far enough to interfere with cutting the tooth. If the pitch cone angle is so great that the feather would be narrow at the rim it may be made as shown in Fig. 163.

191. It is customary to draw bevel gears in section and to give on the drawing the dimensions for turning the blank. The

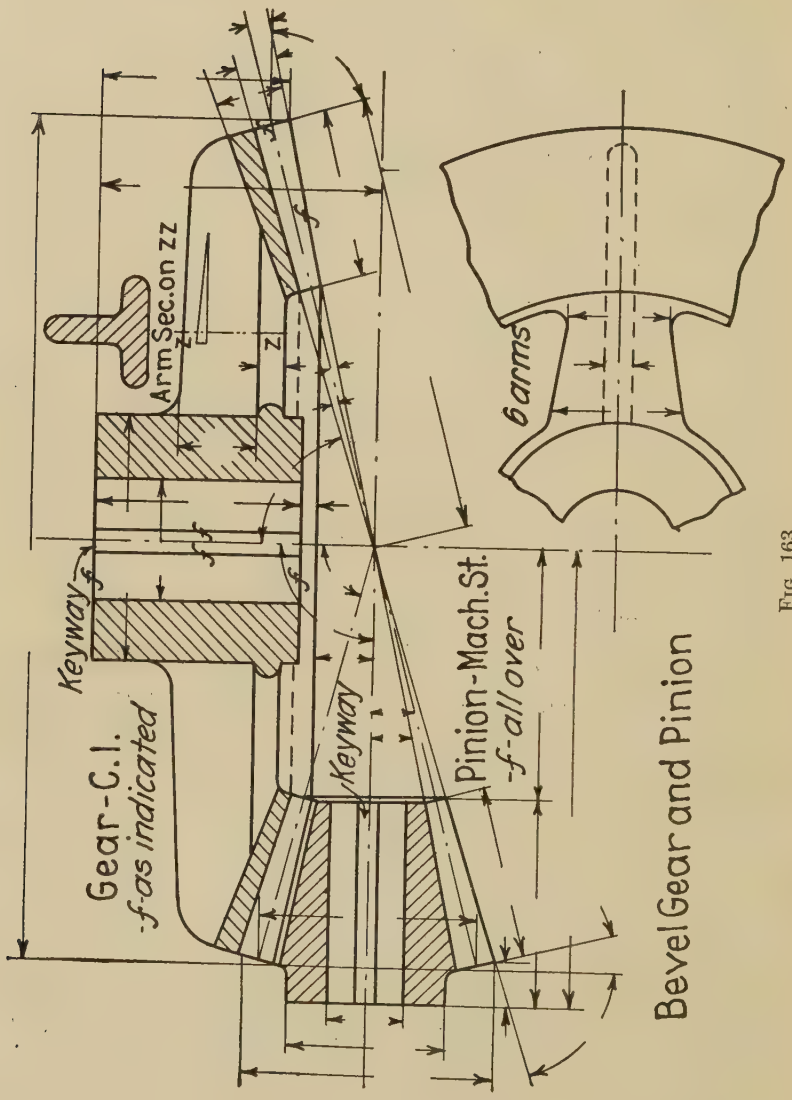
Arm Sec. on zz
z
z
6 arms
Keyway
Keyway
Gear - C.I.
-f- as indicated
Pinion - Mach. St.
-f- all over
Bevel Gear and Pinion

Fig. 163.

directions for cutting the teeth are given in tabular form on the drawing as follows:-

Data for Cutting Teeth.	Gear.	Pinion.
Number of teeth	60	15
Cutting angle	—°	—°
No. of cutter		
Diametral pitch	3	
Shape of teeth	15° involute	
Addendum	0.333	
Whole length of tooth	0.719	
Tooth thickness	0.524	
Addendum at small end	0.204	
Tooth thickness small end	0.320	

The dimensions required on the drawing for the pattern maker and machinist are given in Fig. 163. The pattern for the gear "blank" must be made before the machinist can receive the casting of the wheel on which he is to form teeth, therefore many dimensions are used which are of no value to the machinist.

192. There are a number of angles needed on a bevel gear drawing which can be calculated from the principal dimensions more accurately than they can be measured with a protractor. Bevel gear angles and dimensions are named as follows (see Fig. 164):

θ = center angle;
F = face angle = $\theta + J$;
C = cutting angle = $\theta - K$;
J = angle increment;
K = angle decrement;
V = diameter increment;
Y = backing;
D_l = pitch diameter large end;
D_s = pitch diameter at small end;
D_o = outside diam. = $D_l + 2V$ (at large end);
P = circular pitch;
p = diametral pitch;
a = apex distance;

H = distance from pitch line to apex;
H_1 = distance from point of tooth to axis of mating gear;
R = face measured parallel with axis;
M = depth of rim at front end;
b = face;
S = addendum $= \frac{1}{p}$;
n = number of teeth;

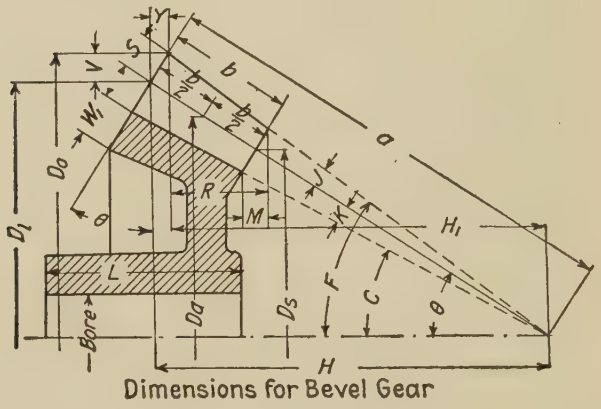

Dimensions for Bevel Gear

FIG. 164.

FOR MITRE GEARS

$\theta = 45°$;

tan. $J = \frac{S}{a}$ or $\frac{1.414}{n}$,

tan. $K = \frac{1.636}{n}$,

$V = 0.707S$;

$Y = 0.707S$;

$a = D_1 \times 0.707$;

$R = b \cos F$;

$D_s = D_1 - 2(b0.7071)$.

When the axes are not at right angles there are four other combinations, viz.: (1) angle axes less than 90°, (2) axes greater than

90°, (3) crown bevel gears, and (4) internal bevel gears. The center angles for these combinations are found as follows:

α = angle between shaft axes;

θ = center angle of gear;

θ_1 = center angle of pinion;

N_2 = No. of teeth in gear;

N_1 = No. of teeth in pinion;

Case (1)

$$\text{Tan } \theta = \frac{\sin \alpha}{\frac{N_1}{N_2} + \cos \alpha}, \qquad \theta_1 = \alpha - \theta.$$

Case (2)

$$\text{Tan } \theta = \frac{\sin (180° - \alpha)}{\frac{N_1}{N_2} - \cos (180 - \alpha)}, \qquad \theta_1 = \alpha - \theta.$$

Case (3)

$$\theta = 90° \qquad \theta_1 = \alpha - 90°.$$

Case (4)

$$\text{Tan } \theta = \frac{\sin \alpha}{\sin \alpha - \frac{N_1}{N_2}}, \qquad \theta_1 = \theta - \alpha.$$

193. The strength of bevel gear teeth is based on the Lewis formula modified to suit the changing pitch found in them. The Lewis formula is

$F = S_s P b y$ and modified by Barth to $F = S_s P b y \dfrac{600}{600 + V}$.

In using this formula (P) is taken as the average pitch (P_a) of the tooth; that is at the middle point of the face. To determine

this we must first find the apex distance (a) which is obtained from

$$a = \frac{D_l}{2 \sin \theta}.$$

The average pitch is then found from the following formula:

$$P_a = \frac{P\left(a - \frac{b}{2}\right)}{a}.$$

The value of (V) is determined from the *average* pitch diameter when the R.P.M. of the gear are known. $D_a = NP_a 0.3183$ (N = No. of teeth), $V_a = 0.2618 D_a \times$ (R.P.M.).

The tooth factor (y) is determined by the number of teeth in the circle whose radius is the slant height of the normal cone (See Fig. 160) (Art. 187). This number will be greater than the actual number of teeth cut on the gear itself. The expression for the number of teeth (N_1) to use is, $N_1 = \frac{N}{\cos \theta}$, where ($N$) = actual No. of teeth in gear. S_s is the static stress to be allowed in the teeth. This is 8000 lbs. for cast iron and 20,000 lbs. for steel. The modified Lewis formula for bevel gears will finally read as

$$F = S_s P_a \, by \, \frac{600}{600 + V_a}.$$

The H.P. which a pair of bevel gears will transmit will depend on the load (F) and the velocity (V_a) or H.P. $= \frac{FV_a}{33000}$. (V_a is the velocity in ft. per min.) The load (F) must be taken for the wheel having the weaker teeth, usually those of the pinion if it is made of the same material as the gear.

If a drawing of a gear is at hand when making the calculations for strength it is usually quite accurate enough to scale the dimensions (a), (D_a) and slant height of normal cone, and use them in the calculations. V_a can be easily calculated from (D_a) and the R.P.M. of the gear in question.

194. In ordering bevel gears the following information should always be given either for a new pair or to replace worn gears:

Gear		Pinion	
Number of teeth	$=N_2$	Number of teeth	$=N_1$
Circular pitch	$=P$	Pitch	P
Face	$=b$	Face	$=b$
Bore of shaft		Bore	
Pitch diameter	$=D_i$	Pitch diameter	$=D_i$
Outside diameter	$=D_o$	Outside diameter	$=D_o$
Backing	$=Y$	Backing	$=Y$
Pt. of tooth to center of pinion shaft	$=H_1$	Pt. of tooth to center of gear shaft	$=H_1$
Length of hub	$=L$	Length of hub	$=L$
Diam. of hub		Diam. of hub	
Key seat		Key seat	
Material		Material	

Shaft angles assumed at 90° unless otherwise stated. State whether keyway is straight or tapered, and if tapered, from which side it drives. It is advisable to send a paper impression of the teeth if replacing old gears.

The following books treat the subject of bevel gears more in detail:

Elements of Machine Design, by W. C. Unwin.
American Machinist Gear Book, by Charles H. Logue.
Machinery Reference Book No. 37, by Ralph E. Flanders.
I. C. S. Pamphlets.
The Constructeur, by Reuleaux.

INSTRUCTIONS

Bevel Gears

Three exercises of 2 hrs. each. Paper No. 3. Make a drawing of a bevel gear and pinion both in section in view containing the shaft axes. Draw an outline of half the teeth in the pinion by the Tredgold method, and show two views of half the pinion teeth as represented in Figs. 3 and 4 of Fig. 161. Use 15° involute system. The drawing of the gear and pinion is to be like Fig. 163 with the Table added as given in Art. 191. The angles are to be given to degrees and minutes and dimen-

sions to hundredths, except in cases where they can be given in sixteenths, eighths, quarters, etc.

Teeth dimensions, pitch diameters, backing, outside diameter of blank, addendum, are some of the dimensions to be given in decimals. Calculate the diameter of shaft for each gear (same as for spur gears) using $\left(\frac{D_a}{2}\right)$ and force (F) and wrought iron as material.

Draw the large gear with arms of ⊥ section if the pitch diam. is 18″ or more. If the pinion has 15 teeth or less make it of steel. All the gears will be of cast iron except as above noted. The pitch diameter given is for the *larger* of the two gears. Average time required is 6.2 hours.

TABLE TO BE USED FOR DATA REQUIRED IN DRAWING THE BEVEL GEARS

	1	2	3	4	5	6	7	8	9	10	11	12
α shaft angle°	90	85	80	75	70	65	60	70	75	80	85	90
Velocity Ratio (y)	1.46	1.5	1.5	1.71	2.07	1.66	1.94	2.2	2.36	2	1.92	2.25
Ratio (x)	1	1	1	1	1	1	1	1	1	1	1	1
D (Pitch diam.)	7.6	12	12	12	12	10	12	11	11	12	12	18
p (diametral pitch)	$2\frac{1}{2}$	$2\frac{1}{2}$	$2\frac{1}{4}$	2	$2\frac{1}{4}$	$2\frac{1}{2}$	$2\frac{3}{4}$	3	3	$2\frac{1}{2}$	$2\frac{1}{4}$	2
b (Width face)	$2\frac{1}{4}$	$2\frac{1}{2}$	3	$3\frac{1}{4}$	$3\frac{1}{8}$	3	$2\frac{1}{2}$	$2\frac{1}{4}$	$2\frac{1}{8}$	$2\frac{3}{4}$	$3\frac{1}{4}$	3
R.P.M. pinion	145	150	160	170	200	170	200	220	240	210	220	240

	13	14	15	16	17	18	19	20	21	22	23	24
α shaft angle	85	80	75	70	65	60	70	80	90	110	120	100
Veloc. Ratio (y)	1.94	1.66	3	3	4	3.33	2	5	4	2	$3\frac{1}{2}$	5
Ratio (x)	1	1	1	1	1	1	1	1	1	1	1	1
D (Pitch diam.)	12	10	24	24	24	20	26	25	24	26	20	25
p (Diametral pitch)	$2\frac{3}{4}$	$2\frac{1}{2}$	$2\frac{1}{4}$	2	2	2	2	2	$2\frac{1}{2}$	2	2	2
b (Width face)	$2\frac{1}{2}$	3	$3\frac{1}{2}$	4	4	$3\frac{1}{4}$	$4\frac{1}{4}$	$4\frac{1}{8}$	$3\frac{3}{4}$	$4\frac{1}{4}$	$3\frac{1}{4}$	$4\frac{1}{8}$
R.P.M. pinion	210	200	310	320	400	350	310	250	260	250	350	250

When a (′) mark is placed after the number of column given on the bulletin board assignments, it means take the angle alpha in the column under the number, but take all the other data from the next column to the right.

Prob. 1. Calculate the H.P. transmitted by the gears you are drawing when the pinion makes the number of R.P.M. given in the column you are using. First find the value of (F) in the Lewis formula applied to bevel gears. Velocity calculated at center of face and P_a taken at the same point.

Prob. 2. Given the angle between two shafts, the velocity ratio between them, R.P.M. of one of them and pressure on the teeth to determine the proper pitch to use and the diameters of the gears for both shafts.

Use angle α, velocity ratio and R.P.M. given in the above table. For pressure (F) in lbs. use twice the number given for R.P.M.

Prob. 3. A pair of C. I. bevel gears axes at 90° are to transmit 65 H.P. The ratio of their diameters is 5 to 6. The smaller gear makes 190 R.P.M. Width of face limited to $5\frac{1}{2}''$. Its pitch diameter is 30″. Calculate the pitch and No. of teeth in each gear.

Prob. 4. Find the working strength of a pair of C. I. mitre gears making 200 R.P.M. Each gear has 55 teeth, 2″ pitch, 6″ face and 15° involute system.

Prob. 5. The angle between shafts of two bevel gears is 60° and the diameters of the gears are 30″ and 36″. Calculate the center angle of the smaller gear.

Prob. 6. Angle between shafts = 90°, $p = 3$, No. of teeth in pinion = 15, in gear 60, width of face = 4″. Make the necessary calculations for dimensions of pinion and gear.

Prob. 7. What power can be transmitted by a pair of mitre gears having the following dimensions? 30 teeth—2 inch pitch—5 inch face—19.107″ pitch diameter, at 50 R.P.M. Made of cast iron.

CHAPTER XVII

WORM GEARING

195. Worm gearing is a modification of screw gearing in which the shafts are at right angles, axes non-intersecting. The velocity ratio of screw gearing is independent of the radii of the pitch surfaces, the great advantage of screw gearing being that a high velocity ratio can be obtained with comparatively small wheels. The disadvantage is that friction and wear are greater than with toothed gearing. The efficiency of a worm and worm wheel depends on the coefficient of friction between the rubbing surfaces on the thread angle and the velocity of the rubbing surfaces. An efficiency of 98% has been obtained under ideal conditions, but ordinary conditions of use will reduce this to from 60% to 80%.

196. The *worm* consists of a threaded cylinder several inches long having a thread with a profile of the Acme form. The linear *pitch* of the thread is the axial distance from a point on a tooth to the corresponding point on the next one. The *lead* is the distance a point on a thread advances axially in one revolution of the worm. A single-threaded worm will have its pitch and lead equal, while a triple-threaded worm will have a lead three times the pitch. To find the *lead* of a worm multiply the linear pitch by the number of threads.

197. The velocity ratio of worm and worm wheel is the same as the number of teeth in the wheel if the worm is single-threaded. If the worm is double or triple-threaded the velocity ratio is respectively $\frac{1}{2}$ and $\frac{1}{3}$ the number of teeth in the wheel. The teeth of the worm wheel when shown in section as in Fig. 165 are like the teeth of a spur gear, involute system, line of action $14\frac{1}{4}°$. The worm teeth, when cut by a section plane containing the axis, are like the teeth of a rack. Circular pitch is used for worm gearing because it is more convenient to cut the worm teeth to this dimension. The strength of the wheel teeth deter-

mines the value of the pitch to use. The number of threads in the worm does not affect the circular pitch of the wheel.

198. The length of the worm varies from $3P$ to $6P$ although, as only two teeth are in contact at one time, $3P$ is enough. To find the minimum length of worm advisable for complete action with wheel, subtract four times the addendum of the worm thread from the throat diameter of the wheel, square the remainder and subtract the result from the square of the throat diameter of the wheel. The square root of the result is the minimum length of worm advisable. The pitch diameter of the worm varies from $2P$ to $6P$ but is generally as small as possible, except when the angle of the worm thread approaches 45°, when the conditions can be reversed.

The addendum may be taken as $0.3183P$ and the whole depth of tooth as $0.6866P$. The helix angle of the worm determines the efficiency to a large extent. Angles below 9° have proved to be unsuccessful while all above 12° 30′ have proved successful according to Mr. Wilfred Lewis, Mr. Christie and other engineers. This angle is the angle between the helix and a perpendicular to the axis of the worm. According to recent experiments a maximum efficiency is obtained with an angle of 45°, but the efficiency changes very little if this angle is decreased to 30° or increased to 60°. Prof. Unwin gives for the efficiency (e) of a worm and wheel

$$e=\frac{1-\mu\cot\alpha}{1+\mu\tan\alpha}.$$

Prof. Barr gives the efficiency (e) (neglecting the friction due to end thrust) as

$$e=\frac{\tan\alpha(1-\mu\tan\alpha)}{\tan\alpha+\mu},$$

which is a maximum when $\tan\alpha=\sqrt{1+\mu^2}-\mu$. μ = coeff. of friction. Substituting $\mu=.05$ in above gives the angle $\alpha=43°\ 34'$. If the friction of the worm step is considered

$$e=\frac{\tan\alpha(1-\mu\tan\alpha)}{\tan\alpha+2\mu},$$

which is a maximum, when $\tan\alpha=\sqrt{2+4\mu^2}-2\mu$. If $(\mu)=0.05$, $\alpha=52°\ 49'$, the angle for max. efficiency. A change in the value of (μ) in the preceding formulæ will change the value of the efficiency, reducing it considerably when the angle (α) is small.

The lower the efficiency the greater the wear. The angle may be increased in two ways, increasing the pitch with a constant diameter or reducing the diameter with a constant pitch. To find the helix angle (α) of the worm, multiply the pitch diameter of the worm by (π) and divide the lead by this product. The quotient is the tangent of the thread angle (α).

199. The speed of the rubbing surfaces of worm and wheel when the gear is worked up to the limit of its strength should not greater than 200 to 300 ft. per min. according to Mr. Lewis. If this limit is exceeded abrasion occurs. Higher velocities can be used if the load is decreased. Before the limit is reached there is a pressure at which the friction suddenly increases, due to the squeezing out of the lubricant and consequent rise in temperature. The sliding velocity in ft. per min. at the pitch line is expressed by

$$V=\frac{\pi dn}{12}=0.262dn,$$

where d=pitch diam. of worm in inches and n=R.P.M. of worm. This is true only for small values of (α) and should be multiplied by the secant (α) for thread angles of 20° or more.

In order to make a worm and gear self locking the tangent of the angle (α) must be less than the coefficient of friction (μ), that is

$$\text{Tan } \alpha=\frac{P}{\pi d}<\mu. \quad \begin{pmatrix} d=\text{pitch diam. of worm} \\ P=\text{lead} \end{pmatrix}.$$

If μ is assumed to have an average value of 0.05 then the limiting value of (P) will be $P=0.05\pi d=0.157d$ at which the system will be interlocking at 300 ft. per min. velocity.

200. The resistance to turning the worm is due to the force at the pitch line of the worm wheel called (F), the coefficient of friction (μ) and the tan of α. If we call this resistance (W) we have $W=F$ tan $(\alpha+\Phi)$ where Φ is the angle whose tan is the coeff. of friction.

The reaction between the rubbing surfaces is the tooth pressure expressed as

$$F_1=\frac{W}{\sin\ (\alpha+\Phi)} \text{ or } =\frac{F}{\cos\ (\alpha+\Phi)}.$$

The end thrust on the worm is the pressure on the rubbing surfaces multiplied by the cos (α).

The side thrust on the worm $= F_1 \sin \alpha$. The load (W) can be used to determine the diameter of the worm shaft, for $\frac{WV}{33000} =$ H.P. transmitted. $V =$ velocity of worm pitch line in ft. per min. or $d_1 = k \sqrt[3]{\frac{\text{H.P.}}{N}}$, $N =$ R.P.M. of worm. $k =$ constant $=$ 3.3 for wrought iron at 9000 lbs. per sq. in. stress, and $k = 2.87$ for steel at 13,500 lbs. stress. If the load (W) is taken as acting at $\frac{d''}{2}$ from the axis of the shaft, $\frac{Wd}{2}$ is the twisting moment which is equaled by the resisting moment to torsion of a circular shaft of diameter d_1, or $\frac{Wd}{2} = 0.196 d_1^3 f$, where $(f) =$ max. stress allowed in the shaft material $= 9000$ for W. I., 13,500 for steel. This equation reduces to $d_1 = k_1 \sqrt[3]{\frac{Wd}{2}}$. $k_1 = .083$ for W. I., $k_1 = .072$ for steel, $d =$ pitch diameter of worm.

201. The worm wheel is much like a spur gear wheel excepting the teeth and rim. The rim is curved to follow the circumference of the worm and the teeth are usually made as shown in Fig. 3 of Fig. 165. The angle (θ) may vary from 30° to 45°, but 30° is commonly used. The worm wheel may have thirty or more teeth, less than 30 being considered undesirable. If the velocity ratio is less than thirty the worm must have more than one thread. The *throat radius* of a worm gear is the same as the outside diameter of a spur gear of the same number of teeth and pitch, or $= \frac{(N+2)P.0318}{2}$. The width of rim of the worm gear at the widest part when $\theta = 30°$, is, $b = \frac{d_0 + (0.34P)}{2}$, where $d_0 =$ outside diam. of worm.

The rim and hub may be joined by a solid web, a web with holes in it to lighten the wheel or by arms of elliptical section. In the last case their cross section may be determined as for a spur gear having the same pitch and diameter except the width of face used in the Lewis formula must be the width of teeth at the root. This will be found to be

$$\frac{2\pi \left(\frac{d_0}{2} + .05\, P_1\right) \sec \alpha}{6}$$

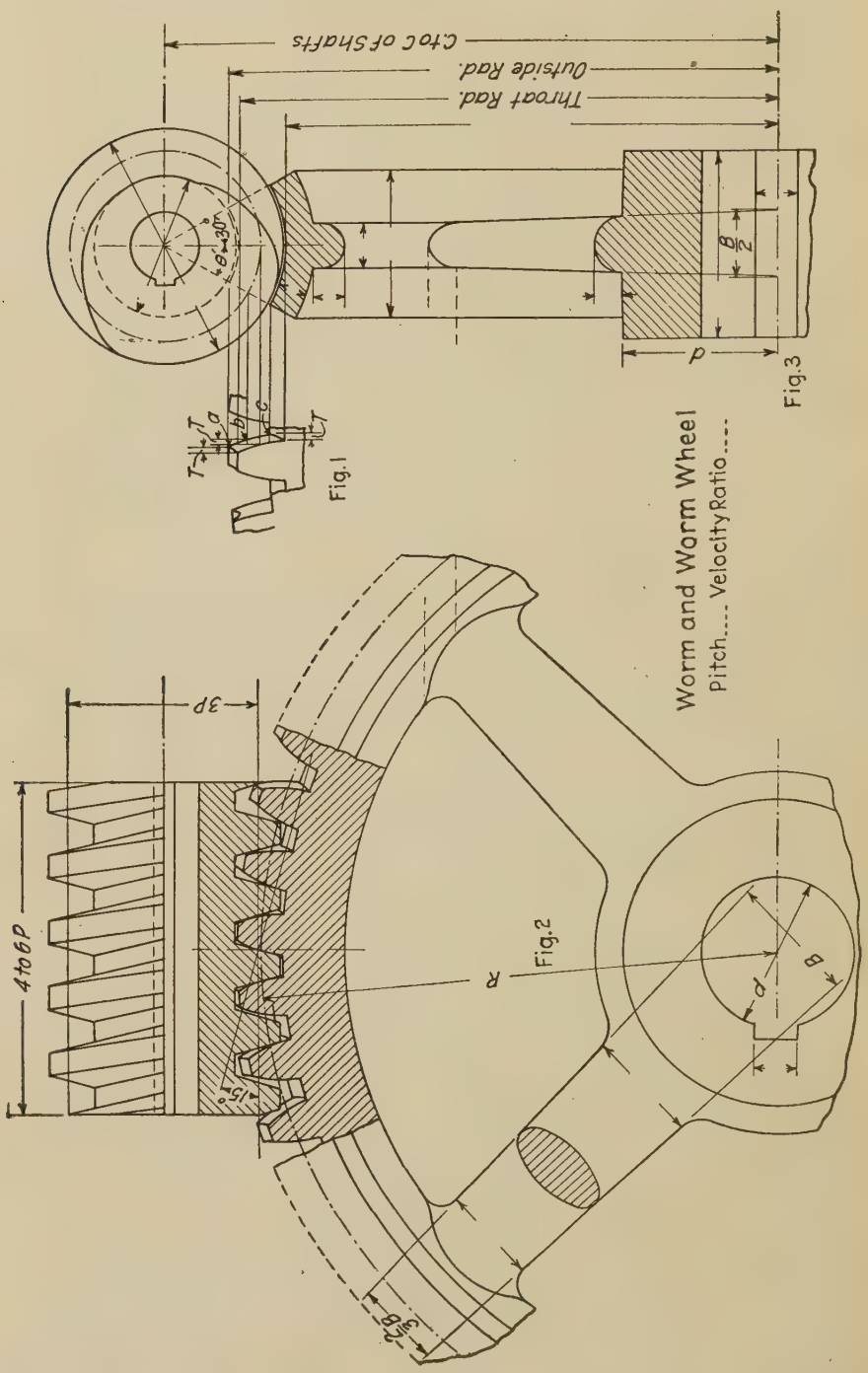
C to C of Shafts
Throat Rad.
Outside Rad.
Fig.3
Fig.1
Fig.2
Worm and Worm Wheel
Pitch.... Velocity Ratio....
4 to 6 P
3P

FIG. 165.

(when $\theta = 30°$), d_0 = outside diam. of worm, P_1 = pitch of worm wheel perpendicular to rubbing surface, equal to $P \cos \alpha$. F_1 must be used in place of F in the Lewis formula and P_1 in place of P. The shaft diameter of the wheel is calculated as for a spur gear. The length of hub and its diameter may be taken according to the proportions given for spur gears.

202. The teeth of worm wheels are generally cut by means of a cutter called a hob, which is a duplicate of the worm made of steel with flutes cut in it parallel to its axis. The hob is mounted in a frame with the worm wheel occupying the same position relatively to it which the worm will occupy but with centers farther apart. The hob and wheel are then rotated with the same velocity ratio for which the worm and wheel were designed and the hob is fed against the wheel. The teeth are first partially formed by a milling cutter previous to cutting with the hob so the final cutting is really a finishing cut. There are certain fine points regarding worm wheel tooth cutting which are out of place in a work of this kind, such as relieving of hobs, number of flutes, length of hob, etc. Books on gear cutting treat of these points in detail and should be read by the designer and student of worm gearing.

203. It is customary to make the worm of different material from the wheel as the wear on the former is greater. Worms are made of hardened steel while the worm wheels are made of cast iron, bronze and steel. Sometimes the rim is made of bronze and fastened to a C. I. central portion to lessen expense. Worm bearings must be arranged to take end as well as side thrust with provision for copious lubrication if efficiency is desired. Ball bearing thrust and annular bearings require less attention than plain bearings besides reducing the coeff. of friction. Such bearings should be used whenever possible, especially in cases where the worm wheel sometimes drives the worm, as in automobile rear axles.

204. In ordering a worm and worm wheel it is always necessary to give the following data for *worm:* Distance c. to c. of shafts—Length of worm—Length of thread—Outside diam. of worm—Pitch of thread—Pitch diam. of worm—Diam. of worm shaft—Key seat of worm shaft—Lead of worm—Right or left hand—Hub projection of worm—Material of worm. *For Gear:* Pitch diam. of gear—No. of teeth—Pitch—Width of rim—Length

through hub—Hub protection—Bore of hub—Key seat of shaft—Hub diam.—Material of wheel.

205. Fig. 166 shows the drawing for a worm, indicating the various dimensions as referred to in the preceding articles. Fig.

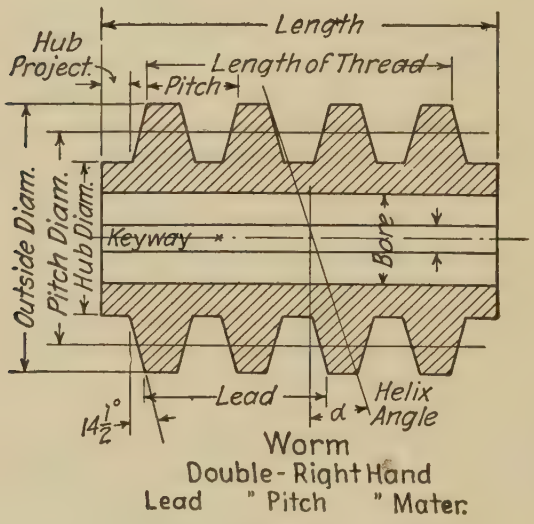

Fig. 166.

167 is a worm gear with similar dimensions on it. It is not necessary on worm and gear drawings to show more than a section of the teeth by a plane through the worm axis. If it is desired to represent the teeth of the wheel as they appear behind this section, it may be done approximately by the method shown in Fig. 168. (D) is the center of the end view of the worm, Db is the pitch radius of the worm and R_1 R_2 R_3 are the radii of the addendum, pitch and dedendum circles of the part of the tooth lying behind the section and on the line DC_{11}. Radial lines are drawn through the three points 1–2–3 until they intersect the circles drawn with R_1 R_2 R_3 respectively as radii. From these points of intersection (T) is laid off as shown, locating three

points on the outline of the rear part of the tooth. A radius is then found by trial which will draw an arc through these three points. $T = \frac{\text{lead of worm}}{12}$, when $\theta = 30°$.

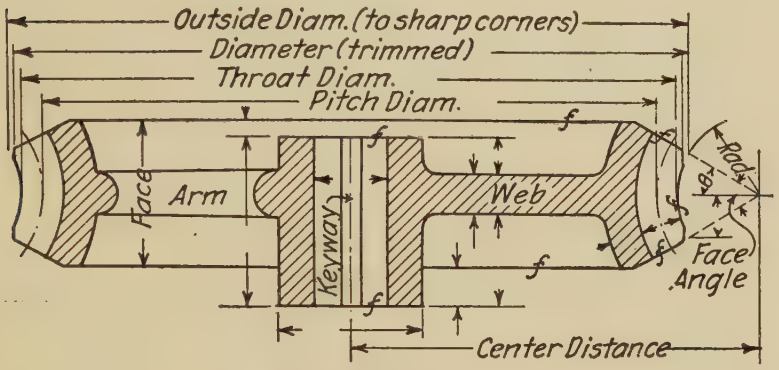

FIG. 167.

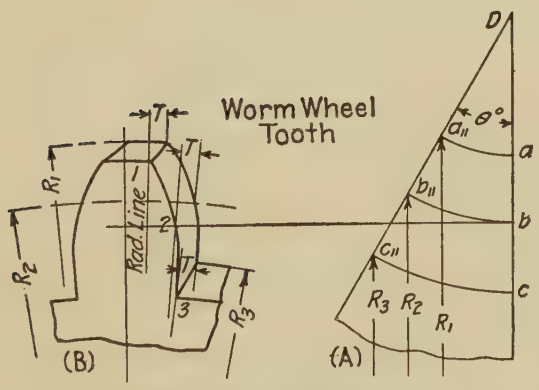

FIG. 168.—½ Worm Wheel Tooth.

The curves on the end of the worm shown in Fig 165 are the intersections of the helicoids forming the thread surfaces with the plane of the end of the worm.

INSTRUCTIONS

Worm Gearing

To be drawn on No. 3 paper in two class exercises of 2 hours each. The views to be drawn will be the same as shown in Fig. 165 (Figs. 2 and 3), omitting Fig. 1. The dimensions and data in the form of notes must include all that which is found in Figs. 166 and 167, as well as the data used in calculating the various dimensions, viz., speed of rubbing surfaces, load on teeth, coeff. of friction, end thrust on worm, calculated efficiency, R.P.M. of worm, velocity ratio, helix angle of worm, H.P. transmitted at R.P.M. of worm. Av. time reqd. for this plate is 6.2 hours.

The involute system, $14\frac{1}{2}°$ worm tooth profile is to be used. The velocity of rubbing surface of worm to be 250 ft. per min.

TABLE FOR WORM AND WORM WHEEL PLATE

No.	1	2	3	4	5	6	7	8	9	10	11	12	13	14	15	16
Circ. pitch...	1″	1	1	1	1	$1\frac{1}{8}$	$1\frac{1}{8}$	$1\frac{1}{8}$	$1\frac{1}{8}$	$1\frac{1}{8}$	$1\frac{1}{4}$	$1\frac{1}{4}$	$1\frac{1}{4}$	$1\frac{1}{4}$	$1\frac{1}{4}$	1
R. or L. Hand	*R*	*L*	*R*	*L*	*R*	*L*	*R*	*L*	*R*	*L*	*R*	*L*	*R*	*L*	*R*	*L*
Lead.....	1″	2	1	3	2	$1\frac{1}{8}$	$1\frac{1}{8}$	$2\frac{1}{4}$	$2\frac{1}{4}$	$1\frac{1}{8}$	$1\frac{1}{4}$	$1\frac{1}{4}$	$1\frac{1}{4}$	$1\frac{1}{4}$	$1\frac{1}{4}$	2
No. Teeth...	62	49	50	51	62	48	44	48	52	38	38	40	41	45	35	50

No.	17	18	19	20	21	22	23	24	25	26	27	28	29	30	31	32
Circ. pitch.	1″	$\frac{7}{8}$	$\frac{7}{8}$	$\frac{7}{8}$	$\frac{15}{16}$	$\frac{15}{16}$	$\frac{15}{16}$	$1\frac{1}{16}$	$1\frac{1}{16}$	$1\frac{1}{16}$	1.187	.9	.8	1.5	1	1
R or L.H'd.	*R*	*R*	*R*	*R*	*R*	*R*	*R*	*R*	*R*	*R*	*R*	*R*	*R*	*R*	*R*	*L*
Lead.....	1″	$1\frac{3}{4}$	$2\frac{5}{8}$	$3\frac{1}{2}$	$1\frac{7}{8}$	$2\frac{13}{16}$	$3\frac{3}{4}$	$2\frac{1}{8}$	$3\frac{3}{16}$	$4\frac{1}{4}$	4.75	2.7	2.4	3	3	3
No. Teeth.	40	50	60	72	56	60	70	48	42	40	32	40	50	50	30	33

Prob. 1. Design a worm and gear to have a velocity ratio of 3 to 1 with a linear pitch of .75″ (about). Center distance between shafts = 5″. What is the efficiency?

Prob. 2. A double threaded steel worm drives a phosphor bronze worm wheel with a velocity ratio of 25 to 1. Center distance of shafts = 13.5″. If the worm makes 350 R.P.M. find the circular pitch of the worm wheel, the pitch diameters, and the helix angle (not to be less than 15°). Also determine the max. tangential pressure allowable on the worm wheel, the H.P. transmitted and the efficiency of the worm and wheel when $\mu = 0.05$.

Test No. 9. Pulleys, Belting and Gearing

Arts. 149–205. (2 hours allowed.)

1.* A hoisting train is shown in Fig. A. The motor is 15 H.P. at 775 R.P.M. The weight is to be raised at a velocity of 500 ft. per min. The gears are C. I., the teeth to run at 800 ft. per min. The velocity ratio of the gears is 4 to 1. The width of face $=5P$. The pulley on the motor is 11″ diam. The drum is 30″ diam. Find the following (*a*): Width of belt, (*b*) Diam. of pulley at *B*, (*c*) Diam. of gears, (*d*) Wgt. of load raised (efficiency 95%), (*e*) Diametral and circular pitches of gear teeth, width of face and teeth in each gear.

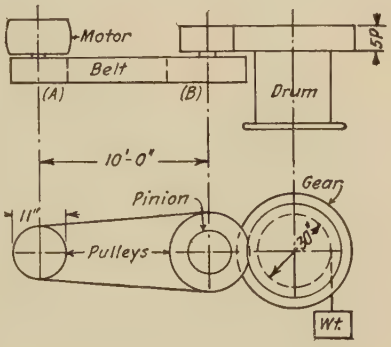

Fig. A.

2.* A worm and wheel are used to drive the rear axle of a truck. If the resistance to slipping the rear wheels is 5200 lbs., and the dimensions are taken for rear wheel, worm wheel and worm, as shown in Fig. B, find the pitch to use on the worm wheel, the number of threads on worm, number of teeth in worm wheel, helix angle, and efficiency of the worm and wheel. The velocity ratio is 8 : 1. The worm wheel is phosphor bronze and the load on the wheel is taken by two teeth. The coeff. of friction may be taken as 0.02.

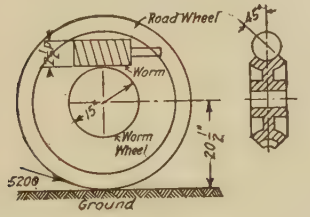

Fig. B.

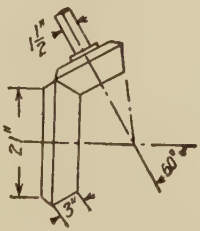

Fig. C.

3. How much H.P. will the C. I. bevel gears shown in Fig. C transmit when the smaller one makes 250 R.P.M. Velocity ratio 3:1 $p=2$, 15° involute system. The pinion has a 1½″ diam. shaft of W. I. Is this shaft large enough to transmit the strength of the gear teeth? Prove your conclusion.

* Take 1 or 2 and 3. Use books in this test.

CHAPTER XVIII

VALVES

206. VALVES are placed in pipe lines in order to control the movement of gases or fluids through the pipes. They can be divided into two general classes, viz.: (*A*) Automatic, (*B*) Controlled. The (*A*) class may be further divided into (1) valves opened and closed by the machine of which they are parts, and (2) valves which are operated by the action of the fluid or gas itself. Class (*B*) comprises valves opened or closed by hand or by independent mechanisms.

Steam valves of engines or pumps and poppet valves of gas engines belong to (*A*, 1).

Water valves of pumps, valves in buckets, check valves and safety valves belong in (*A*, 2). Globe, angle, and gate valves, stop cocks, and pet cocks, belong to class (*B*).

As it is not the purpose of this treatise to treat of automatic machines as a whole, class (*A*, 1) will be omitted and class (*A*, 2) examined.

207. Check valves, as previously stated, belong to class (*A*, 2) and are used to stop the flow in pipes in one direction.

They are used on pump delivery and suction pipes in either a horizontal or a vertical position.

The moving part in these valves may be a ball, a swinging flap or a flat plate lifting and falling.

The ends of the valve bodies are tapped to fit the pipes they connect or flanged to fit the flanges on the pipes.

A check valve for horizontal pipes is shown in Fig. 169.

It is called a " swing check " from the kind of motion of the clapper in opening and closing.

The body is of bronze with tapped ends.

There are three other openings in the body, the largest one for introducing the moving parts into the body. It is closed by a plug with hexagonal end. A second opening, at right angles to

the valve seat, enables the disc on the swinging part to be ground on the seat before assembling the valve. This opening is closed by a threaded plug which acts as a stop for the clapper.

The third opening is at the side of the body and is designed to admit the pin on which the clapper swings. It is closed by a screw plug after the valve is assembled.

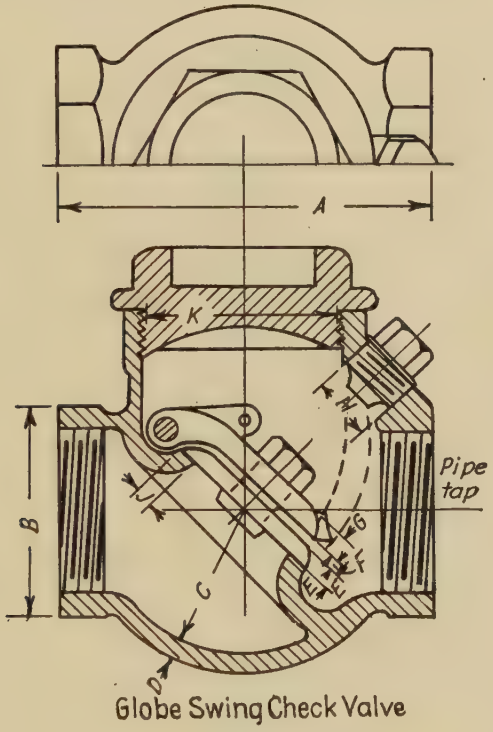

FIG. 169.

The clapper consists of four parts—the rotating disc, the swinging part or hinge, the stud and the nut which fasten the disc to the hinge. The two last parts are loosely joined together so that the action of the fluid will cause the disc to rotate and thus prevent any particle from lodging on the seat. It also permits the disc to seat properly in case the hinge is out of true with the seat.

208. A *direct lift check valve* which forms an angle in a pipe line is shown in Fig. 171. This was first designed by Prof. Charles

B. Richards and does away with air pockets, which are detrimental to the efficient working of a check valve. The threaded ends of the body are like threaded pipe ends and have standard dimensions for perfect thread, imperfect thread, taper and outside diameter.

The lifting part of the valve is guided by three projections cast on the inside of the body and by the stem working in a hole in the screw cap.

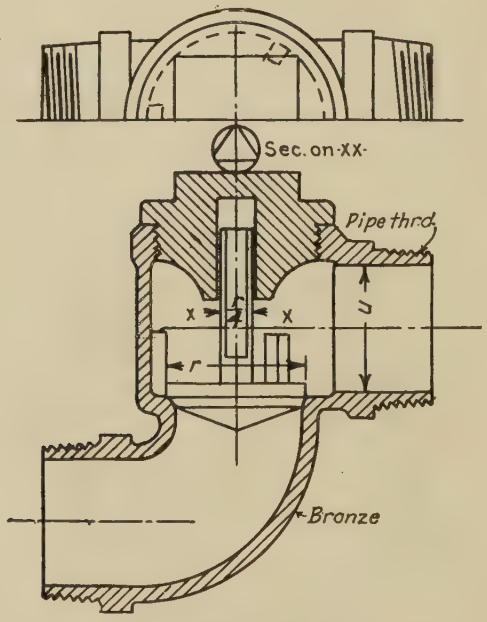

Direct Lift Check Valve

FIG. 171.

The stem is cut away on three sides to allow the fluid in the cavity of the cap to flow out when the valve opens.

The theoretical lift of the valve must be enough to give an area of cylindrical surface between valve and seat equal to the area of the opening in the seat.

If D = diam. of seat opening, $\frac{\pi D^2}{4}$ = area of opening.

If h = lift of valve $h \times \pi D$ = area of cylindrical surface between valve and seat.

As $h\pi D = \frac{\pi D^2}{4}$, we have $h = \frac{D}{4}$ = theoretical lift of valve.

This check valve may be made with the lower end vertical, thus allowing it to be used as an elbow as well as a valve.

209. *Safety Valves* belong in class (*A*, 2) as they are designed to be opened by the pressure of steam or gas within them whenever that pressure exceeds the pressure for which they are set. There are two kinds of safety valve, one controlled by a spring, the other by a dead weight hung from a lever. One of the latter

TABLE OF DIMENSIONS FOR GLOBE AND ANGLE VALVES

(From 3″ to 8″ nominal size.) Flanged cast iron bodies for pressures up to 150 lbs.per sq.in. Required dimension = $\alpha D + \beta$. D = nominal size of valve.

Dimension.	α	β
A same as D		
C	0.9	0.5
D = given diam.		
E = thickness of diaphragm meas. in vert. plane		
$F = M$		
G	0.7	0.5
H	0.6	0.5
I	0.2	0.2
K	0.04	0.25
$L = T$		
M	0.6	0.1
P = 2 × stud diam. + $\frac{1}{16}$″		
Q	1.0	1.75
R = Stand. flange for C. I. pipes, Art. 37		
$S = L$ or $1\frac{1}{2}$ × stud diam.		
T = thickness of C. I. stand. pipe flange Art. 37		
$W = 2Q$		

Dimension.	α	β
	Calc. for 6000 lbs. □″	
a	at 150 lbs. □″ in valve	
$a_1 = a$ + pitch of thread		
b	0.01	0.2
c	0.05	0.25
$c' =$	$0.2E$	
d	0.02	0.1
$d_1 = c^1$		
$f = 2g$		
$g = S$ in Art. 96 stuff. boxes.		
$j = a + 2g + 2t$ + diam. of gland stud.		
m	0.66	2.52
o	0.03	0.15
$p_1 = \frac{n_1}{2} + \frac{5}{8}$″		
$n_1 = 2a_1 + \frac{1}{4}$″		
q	0.14	0.6
q'	0.17	0.75

Dimension.	α	β
q''	0.25	0.8
q'''	0.26	0.9
r	$\frac{q}{3}$	
$t = \frac{u}{2} - 0.07$		
u	0.12	0.55
$v =$		

Pitch of thread on stem is $\frac{1}{4}$″ for valves up to 10 in., and $\frac{1}{3}$″ above that size.

TABLE FOR SAFETY VALVES

Safety Valve dimensions not given below can be taken from the Table for globe valves.

Dimension.	α	β	Dimension.	α	β	
a	0.055	0.14	k	0.38	0.24	Flange bolts (see C. I. standard flanges) Art. 37. Bonnet studs same as flange bolts in number and diam. Do not place any flange bolts on the vertical diam. of flange.
$a_1 = \frac{2}{3}$ of (a)			l_1	0.22	0.18	
d = diam. bonnet stud $+\frac{1}{8}''$			m	0.09	0.08	
$e = \frac{A}{2}$			$n = f - \frac{1}{16}''$			
			o	0.1	0.57	
f	0.25	0.625	p	0.65	1.3	
f_1	0.16	0.8	q	0.27	0.57	
g	0.17	0.35	r	0.09	0.2	
h	0.28	0.32	s'	0.22	0.3	
i	0.5	0.5	u	0.6	1.0	
j	0.09	0.08	v	0.25	0.75	

is shown assembled in Fig. 172. It is designed to stand a maximum pressure of 100 lbs. per sq.in. A shell of cast iron is provided with three openings for pipe connections through two of which (1) and (2) steam may pass freely from boiler to engine. The third opening (3) is provided for the escape of steam from the valve when the pressure within causes the valve to open. An opening is provided at the top of the shell through which the valve disc is introduced as well as the seat on which it rests. A bonnet closes this opening and is held in place by stud bolts and nuts. The stem passes through the bonnet and transmits pressure from the valve disc to a lever whose fulcrum is a pin at its left hand end. The upward pressure of the stem against this lever tends to move it in a vertical direction about the fulcrum. To counteract this movement, a ball is hung on the lever to the right of the stem and at a distance from the fulcrum corresponding to the pressure to be balanced within the valve. The lever is supported and guided by a yoke which slips over the central part of the bonnet and is locked in any position by a locknut.

The valve stem is fastened to the disc by a nut of special form made to fit loosely around the stem and screw into the disc. A flange on the stem enables the nut to draw the disc and stem tightly together.

A cylindrical rod formed on the bottom of the disc passes through a guide supported by two arms cast with the seat. This

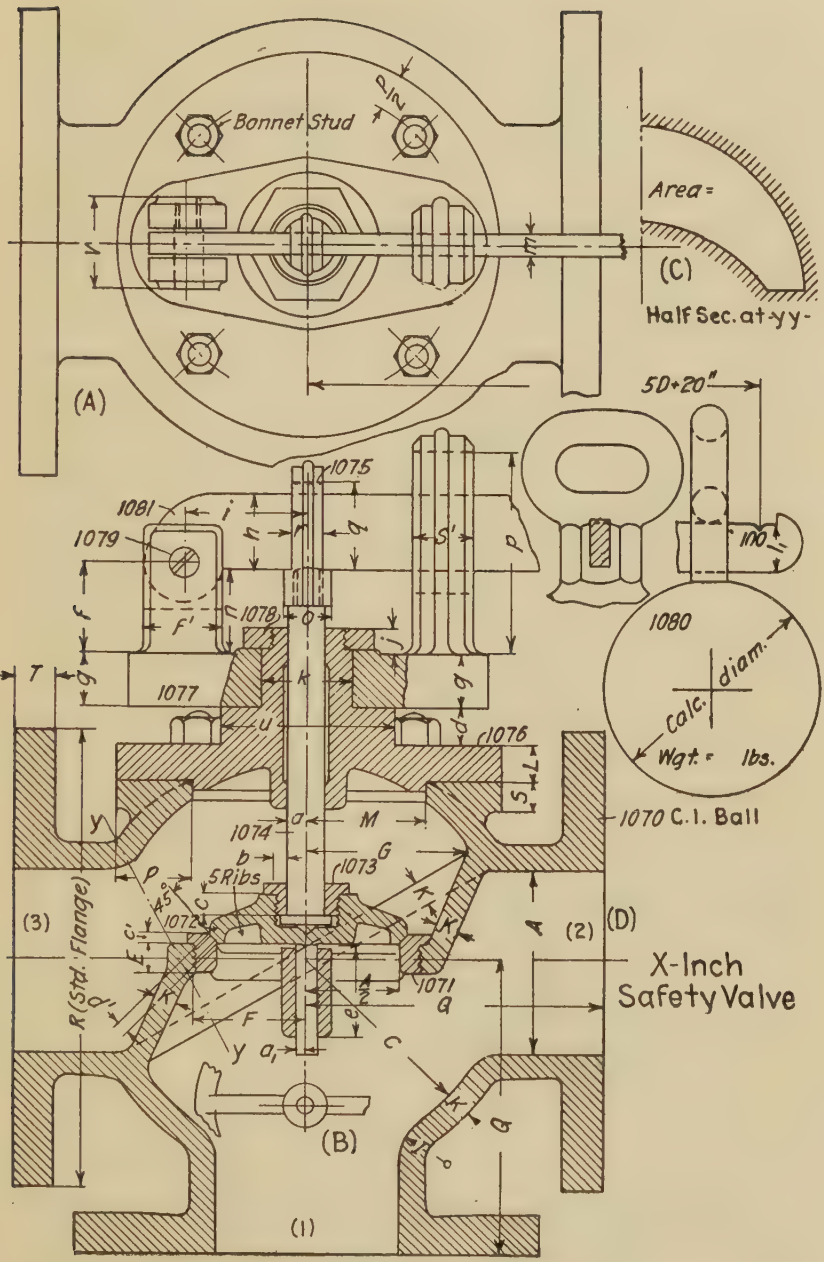
Bonnet Stud
Area =
(C)
Half Sec. at yy
(A)
5D+20"
1075
1081
1079
1078
1077
1076
1080
diam.
Calc.
Wgt. = lbs.
1070 C.I. Ball
1074
1073
5 Ribs
1072
1071
(3)
(2)
(D)
X-Inch
Safety Valve
R (Std. Flange)
(B)
(1)

FIG. 172.

guide insures exact seating of the disc on the seat. The seat is screwed into place by fine threads, viz.: 14 to 8 per inch depending on the size of valve; the finest on the smallest valve. The flanges of these valves are made of standard size to fit C. I. pipe flanges as given in Table 11 or in Chap. III. The drilling of these flanges for bolt holes is determined from the same table. The spacing is symmetrical with respect to a vertical diameter without placing any bolt hole on this diameter. Use the same number of bolts to hold the bonnet on. They may have the same diameter as the flange bolts but are studs with hex. nuts. The flange bolts will have sq. heads and hex. nuts.

210. In order to obtain the proper area through the narrowest portion of the valve it is necessary to find the true shape of the section taken by a plane $-yy-$. The area of this section should not be less than the internal cross sectional area of the pipe connected to the valve. This latter area will be that of a circle whose diameter is (A).

The construction of the outline of the section yy is shown in Fig. 173, being obtained as follows: Several planes are passed

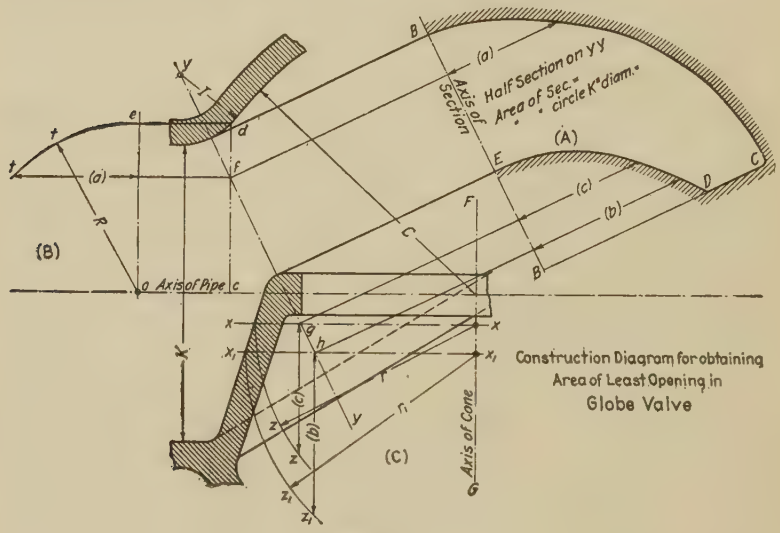

FIG. 173.

perpendicular to the axis of the pipe (View C) to cut circles from the surface of revolution. The circles are then shown in

the end view (*B*) as (*tt*) whose radius (*ot*) equals (*cd*) the distance from the axis to the point where the auxiliary plane cuts the surface of revolution (in View *C*). The point (as *f*) where these auxiliary planes cut the section plane *yy* is then projected to the same end view (*B*) to obtain the distance (*a*) from the vertical center plane of the valve (*oe*) to the inside of the shell. By revolving the plane *yy* about its intersection with the center plane until it lies in the plane of the paper, we obtain the true outline of the section cut by it from the valve. The revolution is shown at (*A*) where *BB* is the axis of symmetry of the section. Points to the right of *BB* on the curve (*BC*) are points on the inside of the shell behind the center plane of the valve. Distances (*a*) are found from the end view (*B*) and laid off perpendicular to *BB* on lines drawn from the various points (*f*) on *yy*. The curve *DE* is found by passing planes (*xx*), (x_1x_1) in view (*C*) perpendicular to the vertical axis (*FG*) of the conical surface. These planes cut circles *zz*, z_1z_1 from the surface shown in plan with radii (*xz*) (x_1z_1). The distances (*c*), (*b*), etc., are then found by dropping perpendiculars from (*g*), (*h*), to meet the corresponding arcs (*zz*), (z_1z_1). These distances are then laid off from *BB* in view (*A*) perpendicular to *BB*.

211. The area of this section is then found by the trapezoidal rule as follows: In Fig. 174 divide the base (*AC*) into any number

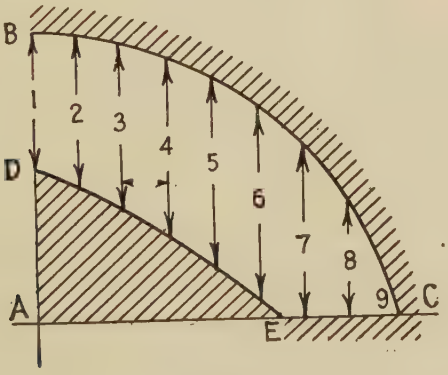

FIG. 174.

of equal parts, and number the ordinates erected at these points. Take ½ the sum of the lengths of the end ordinates—(1) and (9) in the figure—add the sum of the length of all the intermediate

ordinates to the half sum of the end ordinates and multiply the total by the space (e) between two adjacent ordinates. The result will be the area within the curves (BC), (DE) the base (EC) and the ordinate (BD). It is more accurate to first find the area bounded by the outer curve (BC), the base line (AC) and the ordinate AB and then subtract the shaded area ADE. The accuracy of the result is increased by increasing the number of ordinates.

212. The weight of the ball is calculated by the principle of moments about the fulcrum pin (O) as a center. P = the total pressure exerted upwards by the steam at 100 lbs. per sq.in. on the valve disc. p = the weight of the moving parts which rise when the valve opens. $P-p$ = the upward force acting at (A), Fig. 175. The weights acting downwards are the ball

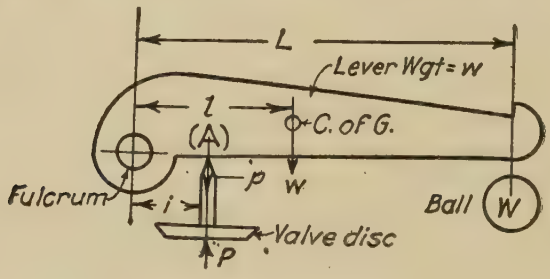

Fig. 175.

(W) and the lever (w) acting at its center of mass. These upward and downward forces are in equilibrium, that is, the algebraic sum of their moments equals zero. $(P-p)i-wl-WL=0$, from which $W=\frac{(P-p)i-wl}{L}$. The lever is wrought iron, the ball cast iron and the moving parts bronze, their weights per cubic inch being W. I. = .28, C. I. = .26, bz. = 0.30. L and i are given either in the table of dimensions or on the plate. The handle of the ball can be designed first, its weight determined and subtracted from the weight (W) thus giving the weight of the ball alone. Its diameter can then easily be calculated.

213. The fulcrum pin diameter can be assumed $\frac{1}{3}f^1$ and its strength checked by calculating it for double shear, which should not exceed 7000 lbs. per sq.in. as the pin is of W. I. The sectional area of the supports for the pin taken by a horizontal plane

through the axis of the pin should be checked for stress in tension. As they are C. I. this stress should not exceed 2500 lbs. per sq. in. of section.

The stress in the bonnet bolts (at root of thread) should be determined for a pressure of 150 lbs. per sq.in. inside the valve. The shell is C. I. and should be checked for stress not to exceed 2000 lbs. per sq.in. in tension for a steam pressure of 150 lbs. per sq.in. The spherical part is treated like a cylinder of equal diameter, viz., $150 \times 2\pi C = 2K \times 2000 \times 2\pi C$.

214. A list of the parts of the valve with a note of their material, etc., should be placed on the drawing in a table somewhat as shown below.

List of Parts for —″ Safety Valve

No. Required.	Mark.	Material.	Name.	Description.
1	1070	C. I.	Shell	Flanges faced and turned
1	1071	Bz.	Seat	
1	1072	Bz.	Disc	
1	1073	Bz.	Disc nut	
1	1074	Bz.	Stem	–*f*– all over
1	1075	C. I.	Stem cap	
1	1076	C. I.	Bonnet	
1	1077	C. I.	Yoke	
1	1078	W. I.	Lock nut	
1	1079	W. I.	Fulc. pin	–*f*– all over
1	1080	C. I.	Ball	–*Rough*–
1	1081	W. I.	Lever	
...	.....	St.	Bonnet studs	U. S. St. nuts —″ diam. — grip.
...	.....	St.	Flange bolts	Sq. hd. hex. nut, —″ diam., —″ lg., —″grip.

Directions as to views, etc., will be found in the instructions. The dimensions for the parts can be worked out from the tables in Art. 209 for any size of valve wanted from 3″ to 8″ diameter. They should be changed from decimals to common fractions before using them on the drawing.

215. In class (*B*) taken in the order of their construction from the standpoint of complication, we find first pet cocks or air cocks as they are called. They are used on pipe lines to allow air or water to escape, either for the purpose of increasing the efficient flow or as an indication that the line is under pressure.

In Fig. 176 is shown a pet cock threaded with a $\frac{1}{4}''$ pipe thread. They can also be obtained in a larger size with a $\frac{3}{8}''$ pipe thread.

The other dimensions are given on the drawing.

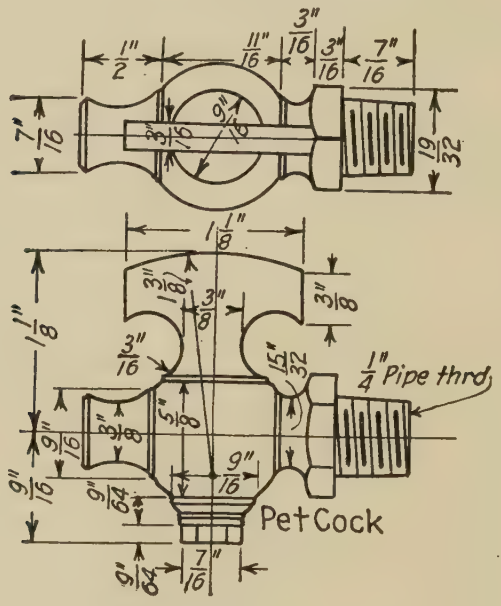

Fig. 176.

216. Stop cocks are used to regulate the flow of fluids in a pipe line. The regulation is obtained by turning a taper plug, fitting in the body, the axis of rotation intersecting and at right angles to the axis of the pipe line.

The taper plug is pierced by a slot which is either brought in line with the openings in the body or turned at right angles to them, thus permitting flow of the fluid or cutting it off entirely. One end of the plug is squared to allow the use of a wrench for turning it. A mark on the end of this square indicates whether the slots are turned to allow the passage of the fluid or not.

In Fig. 177 is shown an assembled stop cock.

The dimensions for several sizes are given in the following table.

TABLE OF STOP COCK DIMENSIONS

Nom. Size.	A	B	C	D	E	F	G	H	I	J	K	M	N	O	P	Q
"																
$\frac{1}{2}$	$1\frac{1}{16}$	$\frac{1}{4}$	$\frac{7}{8}$	1	$\frac{15}{16}$	$\frac{13}{16}$	$1\frac{5}{16}$	$\frac{7}{8}$	1	$\frac{7}{8}$	$\frac{1}{2}$	$\frac{1}{2}$	$\frac{11}{16}$	$\frac{1}{8}$	$\frac{5}{16}$	$\frac{3}{16}$
$\frac{3}{4}$	$1\frac{1}{2}$	$\frac{3}{8}$	$1\frac{1}{8}$	$1\frac{1}{4}$	$1\frac{3}{8}$	$1\frac{5}{16}$	$1\frac{1}{2}$	$1\frac{1}{8}$	$1\frac{1}{2}$	$1\frac{1}{4}$	$\frac{9}{16}$	$\frac{5}{8}$	$\frac{7}{8}$	$\frac{1}{8}$	$\frac{3}{8}$	$\frac{1}{4}$
1	$1\frac{9}{16}$	$\frac{3}{8}$	$1\frac{3}{16}$	$1\frac{1}{2}$	$1\frac{5}{8}$	$1\frac{1}{2}$	$1\frac{7}{8}$	$1\frac{1}{4}$	$1\frac{13}{16}$	$1\frac{1}{2}$	$\frac{11}{16}$	$\frac{5}{8}$	$\frac{7}{8}$	$\frac{1}{8}$	$\frac{7}{16}$	$\frac{1}{4}$
$1\frac{1}{4}$	$1\frac{3}{4}$	$\frac{3}{8}$	$1\frac{3}{8}$	$1\frac{3}{4}$	$1\frac{7}{8}$	$1\frac{9}{16}$	$2\frac{1}{4}$	$1\frac{3}{8}$	$1\frac{7}{8}$	$1\frac{5}{8}$	$\frac{3}{4}$	$\frac{13}{16}$	$1\frac{1}{16}$	$\frac{3}{16}$	$\frac{1}{2}$	$\frac{1}{4}$
$1\frac{1}{2}$	$1\frac{15}{16}$	$\frac{1}{2}$	$1\frac{5}{8}$	$2\frac{1}{8}$	$2\frac{1}{8}$	$1\frac{3}{4}$	$2\frac{5}{8}$	$1\frac{5}{8}$	$2\frac{1}{4}$	$1\frac{3}{4}$	$\frac{7}{8}$	$\frac{15}{16}$	$1\frac{1}{4}$	$\frac{3}{16}$	$\frac{9}{16}$	$\frac{3}{8}$
2	$2\frac{3}{8}$	$\frac{1}{2}$	$1\frac{7}{8}$	$2\frac{3}{4}$	$2\frac{11}{16}$	$2\frac{3}{8}$	$3\frac{3}{8}$	2	$2\frac{15}{16}$	$2\frac{3}{16}$	1	1	$1\frac{11}{16}$	$\frac{3}{16}$	$\frac{9}{16}$	$\frac{1}{2}$

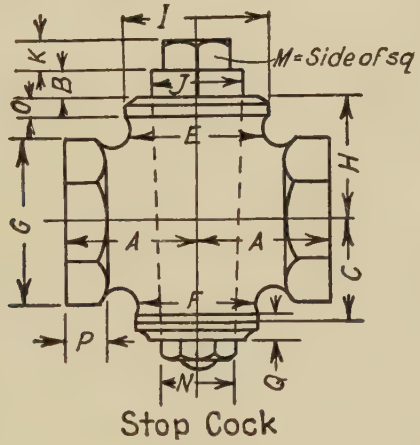

FIG. 177.

217. Angle and globe valves are used to provide a ready means of controlling by hand the flow of fluids by means of a disc which is raised and lowered by a hand wheel and screw thread on the spindle attached to the disc. The disc rests on a seat within the valve when the flow is arrested. When the flow is to continue the disc is raised from the seat, leaving a free passage between them.

An angle valve is used in place of a 90° elbow, the fluid turning through a right angle within the valve itself. The shell for an angle valve is shown in Fig. 178 (*B*). The other parts of the

valve are the same as those in the globe valve shown in Fig. 179. Valves of this type are provided with tapped ends for small sizes and with flanged ends for larger ones. The general outside of the globe and angle valves with tapped ends is shown in Fig. 178 *A*. The inside construction and detail is shown by the section in Fig. 178 (*B*) of the shell of an angle valve, and by Fig. 179 (*B*), the section of a globe valve.

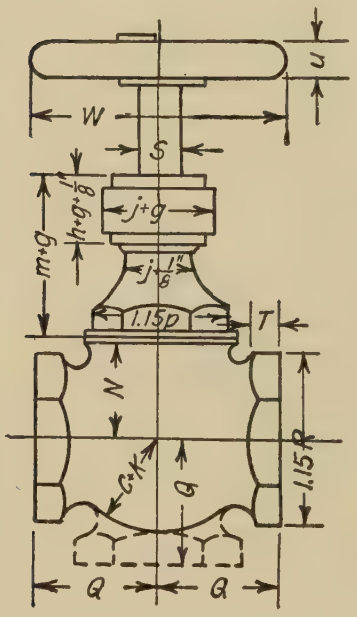

Fig. 178 (*A*).

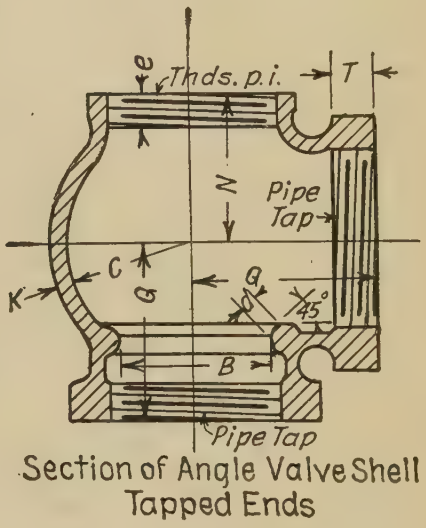

Fig. 178 (*B*).

The various dimensions of these valves can be obtained from the straight line formula, the constants for which are given in the table on page 281 for each lettered dimension. These were all determined by Prof. Charles B. Richards. The required dimension $= \alpha D + \beta D =$ nominal size of valve.

218. Globe valves with flanged bodies are in general constructed as shown in Fig. 180. The shell is spherical in shape having flanges of standard size on opposite sides connected to the spherical portion by cylindrical pipes. In the central portion of the shell is a circular opening into which is screwed a seat. A circular disc closes the opening in this seat. The disc is attached

TABLE FOR VALVES WITH TAPPED ENDS; ALL BRONZE. SIZES $\frac{3}{4}$ TO 3″

Dimension.	Values of		Remarks.
	α	β	
B	0.5	0.0	Diam. opening in valve seat
C	0.7	0.4	Inside radius of shell
D	.....	.....	Nominal diam. (given)
E	0.13	0.12	Depth of valve seat
F	0.5	0.2	Radius of V shell diaphragm
G	0.52	0.21	Radius of V shell diaphragm
H	0.54	0.3	Radius of V shell diaphragm
I	.....	.....	Radius of fillet, globe to pipe
K	0.04	0.1	Thickness of shell
N	0.8	0.5	C. of globe to bonnet flange
O	1.08	0.24	Diam. of opening bonnet seat
P			
Q	0.9	0.8	C. of globe to flanged ends
$\frac{R}{2}$	0.6	0.3	Dist. across flats, flanged ends
T	0.14	0.34	Thickness of tapped ends
a	0.16	0.16	Diam. of screw on valve stem
b	0.04	0.08	Thickness of nut on valve disc
c	0.08	0.09	Depth of nut on valve disc
d	0.05	0.08	Thickness of valve disc
d^1	....	.....	Chamfer valve seat
e^1	0.08	0.3	Thickness of flange on bonnet seat
g	0.1	0.05	Width of stuffing box
h	$=3g$		Depth of stuffing box
i	$=2.5g$		Depth of packing gland
j	0.48	0.54	Diam. stuffing box screw
m	1.1	0.6	Height of bonnet
n	0.32	0.36	Depth of stem screw in bonnet
p	0.9	0.33	Dist. across flats on bonnet hex.
t	0.1	0.2	Thickness of arm of hand wheel
u	0.15	0.3	Diam. of rim of hand wheel
w	$=2Q$		Outs. diam. of hand wheel

Pitch of thread on stem $=0.04D+0.11''$.

to the flanged end of a stem by a nut, with hexagonal head, which slips over the flange and screws into the disc. The stem passes out of the valve through a stuffing box in the bonnet. The bonnet covers the opening in the shell above the seat and also provides a support for the stationary nut through which passes the threaded portion of the stem. A hand wheel is keyed to the stem at its upper end and provides a means of turning the stem in order to raise or lower the disc and thus open or close the valve.

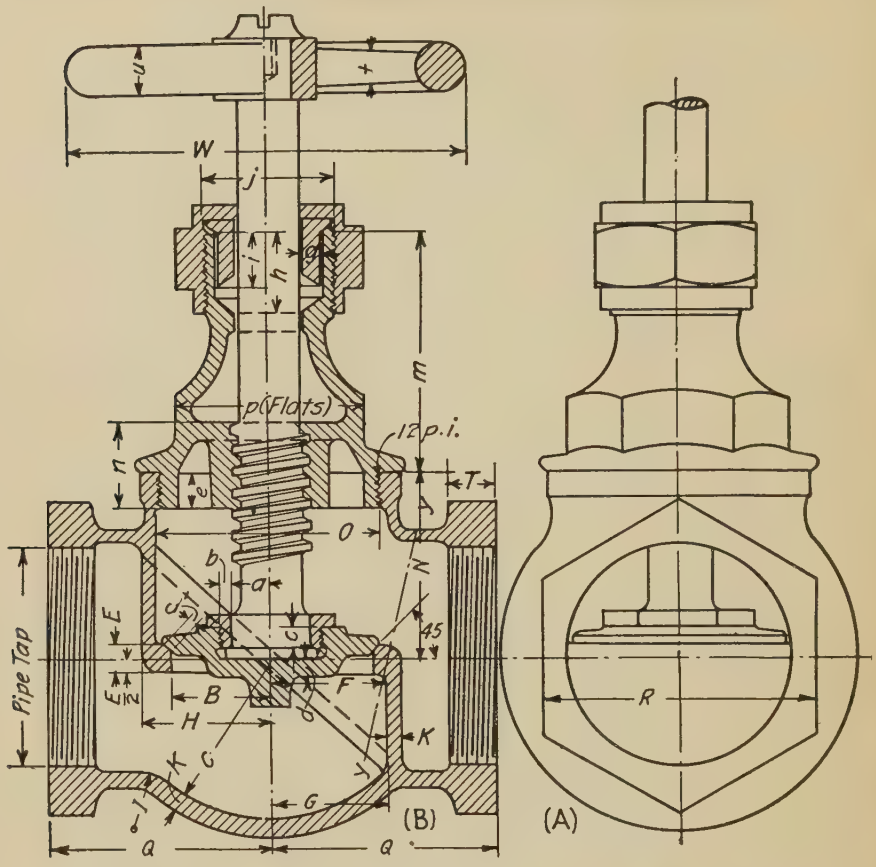

Fig. 179.

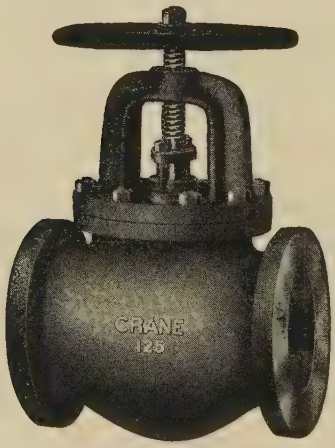

Fig. 180 (*A*).

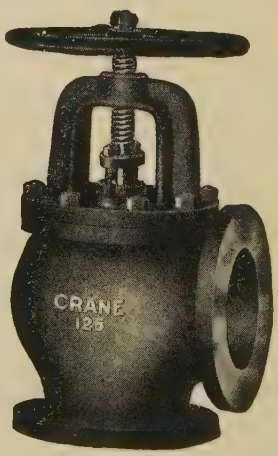

Fig. 180 (*B*).

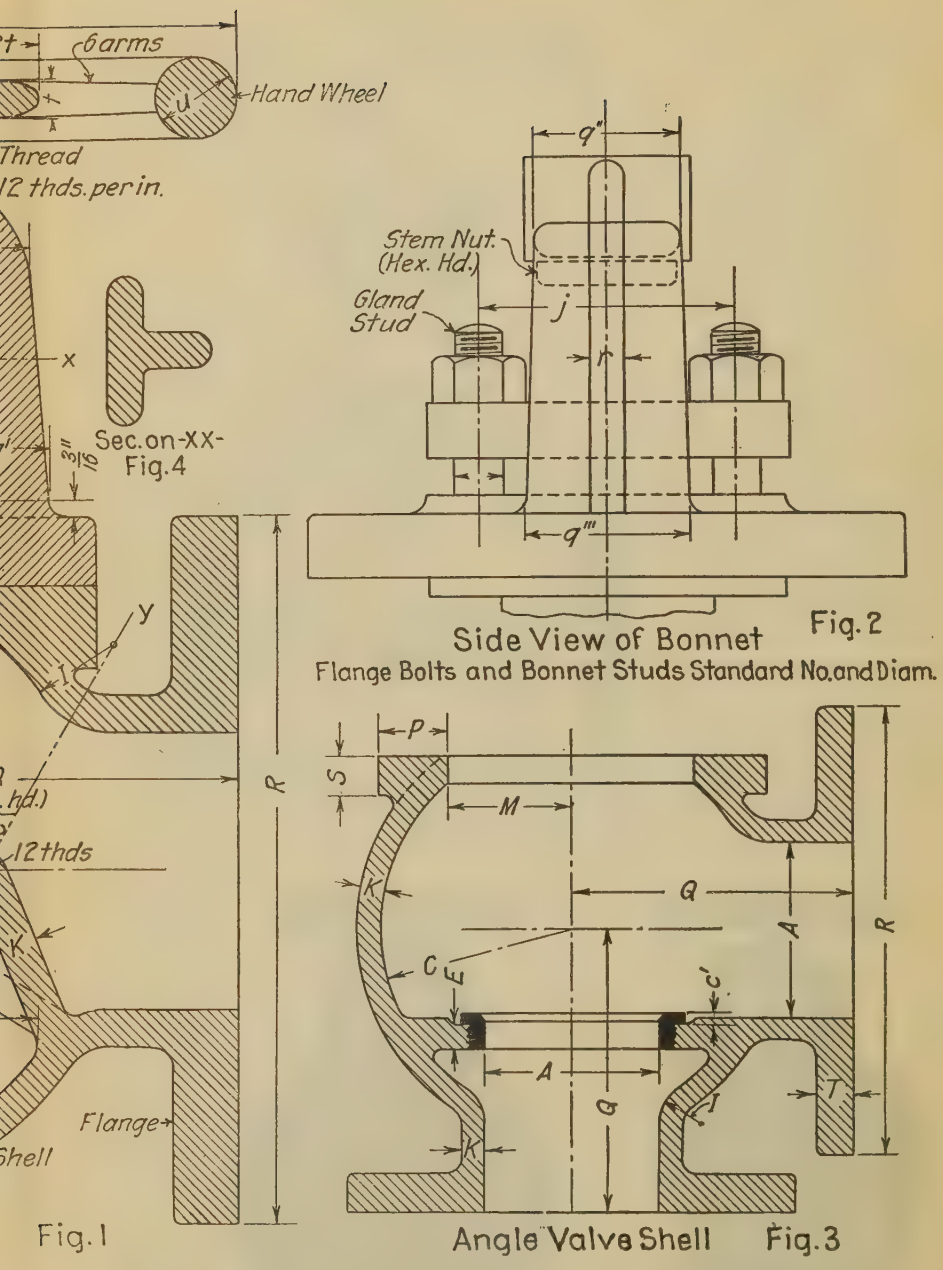

FIG. 180.

(To face page 283)

TABLE OF DIMENSIONS FOR GLOBE AND ANGLE VALVES

(From 3″ to 8″ nominal size.) Flanged cast iron bodies for pressures up to 150 lbs. per sq.in. Required dimension $= \alpha D + \beta$. D = nominal size of valve.

Dimension.	α	β
A same as D		
C	0.9	0.5
D = given diam.		
E = thickness of diaphragm meas. in vert. plane		
$F = M$		
G	0.7	0.5
H	0.6	0.5
I	0.2	0.2
K	0.04	0.25
$L = T$		
M	0.6	0.1
$P = 2 \times$ stud diam. $+ \frac{1}{16}''$		
Q	1.0	1.75
R = Stand. flange for C. I. pipes, Art. 37		
$S = L$ or $1\frac{1}{2} \times$ stud diam.		
T = thickness of C. I. stand. pipe flange Art. 37		
$W = 2Q$		

Dimension.	α	β
a = Calc. for 6000 lbs. □″ / at 150 lbs. □″ in valve		
$a_1 = a +$ pitch of thread		
b	0.01	0.2
c	0.05	0.25
$c' =$	$0.2E$	
d	0.02	0.1
$d_1 =$	c^1	
$f =$	$2g$	
$g = S$ in Art. 96 stuff. boxes.		
$j = a_1 + 2g + 2v +$ diam. of gland stud.		
m	0.66	2.52
o	0.03	0.15
$p_1 = \frac{n_1}{2} + \frac{5}{8}''$		
$n_1 = 2a_1 + \frac{1}{4}''$		
q	0.14	0.6
q'	0.17	0.75

Dimension.	α	β
q''	0.25	0.8
q'''	0.26	0.9
r	$\frac{q}{3}$	
$t = \frac{u}{2} - 0.07$		
u	0.12	0.55
$v =$		

Pitch of thread on stem is $\frac{1}{4}''$ for valves up to 10 in., and $\frac{1}{3}''$ above that size.

The section of the passage by a plane (yy) is constructed as described in Art. 210 and illustrated in Figs. 173 and 174. The method of finding the area is explained in Art. 211. The threads on the stem nut and yoke are finer than standard for that diameter, say 12 p.i. The yoke nut has a hexagonal head whose long diameter is less than (n_1). This enables the short diameter to be found. The diameter of the threaded portion is less than the short diameter. The gland of the stuffing box has two stud bolts and nuts for forcing it against the packing in the box.

219. The forces acting on the stem are: the compression due to the internal pressure in the valve and the torsion produced by turning the hand wheel hard when the disc is pressing against the seat. The former produces a stress in the stem f_c equal to the area of stem $\frac{\pi a^2}{4}$, divided into the total pressure $\frac{\pi A^2}{4}\ p$, against the disc, where $\frac{A}{2}$ = radius of seat opening and p = pressure per sq.in. in valve $f_c = \frac{A^2 P}{a^2}$. Torsion is produced by the force (F) on the hand wheel rim. F times the radius $\left(\frac{W}{2}\right)$ equal to $\frac{FW}{2}$ = moment of the twisting force. This twisting force must overcome the friction of the threads of the stem in the stem nut caused by the pressure against the disc.

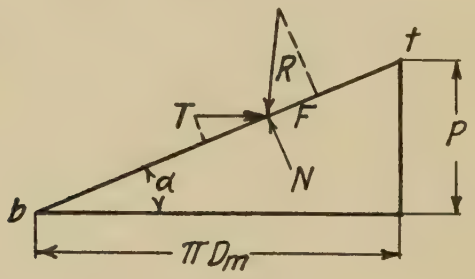

FIG. 181.

Let the pitch of the thread be (P), the mean diameter (D_m) of the thread be taken as equal to $\left(\frac{a_1 + a}{2}\right)$, and the upward resistance $\frac{\pi A^2 p}{4} = R$. The tangent of the helix angle of the thread is found by dividing the pitch by the circumference of the circle whose diameter is (D_m), that is, $\tan \alpha = \frac{P}{\pi D_m}$. The force ($T$) at the middle of the screw thread necessary to turn the stem in the nut is the same as that necessary to slide the load (R) up a plane inclined at the angle (α) with the horizontal (Fig. 181). The load (R) is resolved into two forces, one (N) normal to the incline, the other (F) along the incline. The latter is the frictional

resistance and equals the normal force (N) times the coefficient of friction or $F = N\mu$, but

$$N = \frac{T\cos\alpha - R\sin\alpha}{\mu},$$

obtained from $T\cos\alpha - \mu N = R\sin\alpha$ as the algebraic sum of the components of the forces T and R and the resistance which (N) offers to the movement along the plane, see Fig. 181. The forces resolved perpendicular to the plane give components $T\sin\alpha$ and $R\cos\alpha$, which equal (N) or $N = R\cos\alpha + T\sin\alpha$.

Substituting the value of N obtained above gives

$$\frac{T\cos\alpha - R\sin\alpha}{\mu} = R\cos\alpha + T\sin\alpha,$$

or

$$T = R\left(\frac{\sin\alpha + \mu\cos\alpha}{\cos\alpha - \mu\sin\alpha}\right). \quad . \quad . \quad . \quad (1)$$

Since

$$\cos\alpha = \frac{\pi D_m}{bt}, \quad \text{and} \quad \sin\alpha = \frac{P}{bt},$$

we have

$$T = R\left(\frac{P + \mu\pi D_m}{\pi D_m - \mu P}\right). \quad . \quad . \quad . \quad . \quad . \quad (2)$$

This force (T) acts with a lever arm $\frac{D_m}{2}$ and its moment $\frac{TD_m}{2}$ equals the moment of the force required at the hand wheel rim $\left(\frac{FW}{2}\right)$, or

$$\frac{TD_m}{2} = \frac{FW}{2}, \quad . \quad . \quad . \quad . \quad . \quad . \quad . \quad . \quad (3)$$

from which, by substituting the value of T obtained in (2), we have

$$\frac{D_m R(P + \mu\pi D_m)}{2(\pi D_m - \mu P)} = \frac{FW}{2}. \quad . \quad . \quad . \quad . \quad . \quad (4)$$

In order to prevent the valve from opening under a load the $\tan\alpha$ must be less than the value of μ. If $\mu = .15$ then the angle α must not be greater than 8°–30′.

220. The area of the stem cross section at the root of thread is obtained by equating the total pressure on the disc to the compressive resistance of the metal times the area strained. That is, $\frac{\pi A^2}{4} p = \frac{\pi a^2}{4} f_c$, where (A) is the diameter of the seat opening, (p) the pressure per sq.in. acting on the disc, (a) is the diameter of stem at root and (f_c) the compressive stress allowed per unit area of root section. An additional strain is brought on the stem when the disc comes in contact with the seat and the valve operator increases his pull on the hand wheel to make the disc press very hard against the seat. The actual torsion produced is the torque produced by the operator minus the friction of the threads. From experiments made in screwing up nuts on bolts, the resultant stress on the bolt due to the load and to the stress of screwing up produces a resultant stress from 15% to 20% more than the stress due to direct load. Therefore, in calculating the area of stem at root of thread it is necessary to either decrease the value of f_c or add 15% to the area at root, after calculating it to resist only the pressure on the valve disc.

If the working strength of good bronze is taken as 7000 lbs. per sq.in. for shear and we increase the area 15% this will be equivalent to using a value of 6000 lbs. per sq.in. and calculating the area of (a) for compression alone.

221. The efficiency of the screw may be obtained by using the formula proposed by Prof. Barr, viz.: $e = \frac{\tan \alpha(1 - \mu \tan \alpha)}{\tan \alpha + \mu}$, (α) = helix angle, μ = coeff. of friction. The thread on the stems of valves of this type is usually single and $\frac{1}{4}''$ pitch for valves up to 10″. Above that it is $\frac{1}{3}''$. From the dimensions given in the table on page 283 the efficiency of the screw can be easily determined, provided the value of (μ) is assumed.

The preceding calculations are based on a square thread. If the thread is of any other form, the pressure (N) will become $(N_1) = N \sec. \phi$ where (ϕ) is half the angle between adjacent thread faces. In the case of an Acme thread this angle $\phi = 7\frac{1}{4}°$ and the secant = 1.007, which does not increase the normal pressure enough to consider.

222. The pressure at the root of the threads of the stud bolts used to fasten the bonnet to the shell can be calculated first by dividing the total pressure on the bonnet (due to the pressure

in the valve) by the number of bolts. This will give the load on each bolt which divided by the area of the bolt at root of thread gives the stress per sq.in. of section, due to direct load. 20% increase will give the stress due to both load and screwing up of the nut.

The stress in the yoke uprights can be calculated by finding the maximum load that the stem will carry and dividing it by twice the area of the section (xx). See Fig. 180 (Fig. 4).

223. The valves may be drawn either assembled or detailed or both. In the latter case it is recommended to have one student draw an assembled view and have the detail work done by some other student.

Further directions for drawing assembled and detail views will be found in the instructions. A list of parts arranged as shown for a safety valve in Art. 214, should be placed on the drawing. Dimensions of parts of valves from 3″ to 8″ can be obtained from the table on page 283. They should be changed from decimals to common fractions before using them for drawing purposes. The parts are made of different materials as follows, and require machining as described below:

Shell, bonnet, wheel and gland are of cast iron. Bushing, nuts, disc, stem and seat of bronze. Shell and bonnet flanges to be faced and turned, disc, yoke and nuts to be turned and threaded; spindle turned; gland turned and faced on top, bushing turned. Stuffing box bored out for bushing; bonnet flange turned to fit bored hole in shell and faced; valve disc threaded and faced for stem nut and turned for seat bearing; seat bushing turned and threaded on outside only; seat in shell to be bored, threaded and faced on upper surface; hand wheel bored for spindle and keyed on. Bolts are to be studs with U. S. St. hex. nuts for bonnet and gland and U. S. St. sq. head bolts with hex. nuts for the shell flanges.

Detail drawings are to be fully dimensioned and finished surfaces indicated. The material of which each part is made must be designated below the part, also its name and assembly number.

INSTRUCTIONS

VALVES

Prob. 1. Draw full size on No. 2 paper three views of an assembled (*A*) check valve for a (*B*)″ pipe.

The views are to be a longitudinal section, a top view and a view looking at the end of the valve.

Give all the lettered dimensions as well as others which were assumed in the making of the drawing.

Make a list of parts as indicated in Art. 17.

Four hours allowed in class for this.

Prob. 2. Draw full size on No. 2 paper the details of a (*C*)″ diam. (*D*) check valve.

Each part to be fully dimensioned with finish marks and material indicated.

Three views of the shell will be necessary but only two of each of the other parts.

A bill of material must be placed on the drawing (see Art. 17).

6 hours allowed in class for this.

ASSIGNMENTS FOR PROB. 1 AND 2 (CHECK VALVES)

	1	2	3	4	5	6	7	8	9	10	11	12
A	Sw.	..	D. L.	..	Sw.	...	D. L.	...	Sw.	...	D. L.	
B	$1\frac{1}{2}$	..	$1\frac{1}{2}$	...	2	...	2	...	$2\frac{1}{2}$	...	$2\frac{1}{2}$	
C	..	$1\frac{1}{2}$	...	$1\frac{1}{2}$	..	2	...	2	...	$2\frac{1}{2}$	...	$2\frac{1}{2}$
D	..	Sw.	...	D. L.	..	Sw.	...	D. L.	...	Sw.	...	D. L.

Sw. = swing check. D. L. = direct lift.

Prob. 3. *Stop Cock.* Draw an assembled stop cock for an (*A*)″ pipe making the views full size and as follows.

1. Front view (right hand half in section).
2. Top view (lower half a horizontal section through the axis of pipe).
3. End view (right hand half in section).

Give all dimensions and make a bill of material on the drawing.

Use No. 2 paper.

6 hours allowed in class.

Prob. 4. *Stop Cock.* Make detail drawings of a stop cock for a (*B*)″ pipe, full size.

Show the body half in section in three views. Make outside views of the other parts, dotting in the interior. Give all dimensions, finish marks and make a bill of material on the drawing.

Use No. 2 or No. 3 paper depending on the size of the cock.
6 hours allowed for this work in class.

Prob. 5. Trace a check valve or stop cock.
4 hours allowed.

ASSIGNMENT TABLE FOR STOP COCKS. (PROBS. 3 AND 4)

	1	2	3	4	5	6	7	8	9	10
A (Prob. 3)...	$\frac{3}{4}$	1	$1\frac{1}{4}$	$1\frac{1}{2}$	2					
B (Prob. 4)...	...	...	...	...	...	$\frac{3}{4}$	1	$1\frac{1}{4}$	$1\frac{1}{2}$	2

Prob. 6. Make on one or more sheets of No. 3 paper the $\begin{pmatrix}\text{assembly}\\\text{detail}\end{pmatrix}$ drawings of a (*a*)″, (*b*) valve with (*c*) ends. No *separate* part to be drawn to a smaller scale than half size. No assembled view to be smaller than half size. Details must be completely finished ready for tracing and for shop drawings. Assembled valves are to be dimensioned as shown in Figs. 178, 179 and 180. A bill of material similar to that given in Art. 214 is to be placed on one of the sheets.

The views required of each part or of the assembled valve are enumerated on the following page. The time reqd. for detailing the *S.V.* is 17 hours, for the *G.V.* 15.2 hours.

All the calculations which apply to the kind of valve drawn are to be made and handed in with the finished drawings. These calculations are described in Arts. 210–213 and 218–222. Abbreviations used in Table below are *As* = assembly, *D* = detail, *G* = Globe, *S* = Safety, *A* = angle, *F* = flanged, *Sc* = screwed.

The table for assignment is as follows:

No.	1	2	3	4	5	6	7	8	9	10	11	12	13	14	15	16	17	18
a	3	$3\frac{1}{2}$	4	$4\frac{1}{2}$	5	6	7	8	3	$3\frac{1}{2}$	$2\frac{1}{2}$	2	$1\frac{1}{2}$	3	$3\frac{1}{2}$	4	$4\frac{1}{2}$	5
b	*G*	*G*	*G*	*G*	*G*	*G*	*G*	*G*	*A*	*A*	*G*	*G*	*G*	*S*	*S*	*S*	*S*	*S*
c	*F*	*F*	*F*	*F*	*F*	*F*	*F*	*F*	*F*	*F*	*Sc*	*Sc*	*Sc*	*F*	*F*	*F*	*F*	*F*
	As	*D*	*As*	*D*	*As*	*D*	*As*	*D*	*D*	*D*	*D*	*D*	*D*	*As*	*D*	*As*	*D*	*As*

No.	19	20	21	22	23	24	25	26	27	28	29	30	31	32	33	34	35	36
a	$2\frac{1}{2}$	2	$1\frac{1}{2}$	4	$4\frac{1}{2}$	5	6	7	8	3	$3\frac{1}{2}$	4	5	6	7	8	6	3
b	*A*	*A*	*A*	*A*	*A*	*A*	*A*	*A*	*A*	*S*	*S*	*S*	*S*	*S*	*S*	*G*	*G*	*G*
c	*Sc*	*Sc*	*Sc*	*F*	*F*	*F*	*F*	*F*	*F*	*Sc*	*Sc*	*F*	*F*	*F*	*F*	*F*	*F*	*Sc*
	D	*D*	*D*	*D*	*As*	*D*	*D*	*As*	*D*	*D*	*As*	*D*	*D*	*As*	*D*	*As*	*As*	*D*

Globe, Angle and Safety Valves

Valve Assembled.

Views to be drawn.

1. $\frac{1}{2}$ vertical longitudinal section of valve through axis of pipe. $\frac{1}{2}$ outside view.
2. Top view with $\frac{1}{2}$ wheel removed (G or A) $\frac{1}{2}$ top view for safety valve.
3. End view with left half in section by vertical plane containing axis of stem.
4. Section by plane (yy).

Valve Detailed.

Views to be drawn.

Globe or Angle Valve

(A) Body or Shell. (Cast Iron.)
- (1) Side elevation half (right or left) in section. Dot in interior on the half not sectioned.
- (2) End elevation, right or left half in section.
- (3) Top view.
- (4) Section of passageway by plane (yy).

Area to be found and placed on drawing.

(B) Bonnet. (Cast Iron.)
- (1) Front view (right or left hand in section).
- (2) Side view (right or left hand in section).
- (3) Top view (upper or lower half showing section on xx).

(C) Yoke Nut. (2 views) (bronze.)

(D) Gland. (Cast Iron.)
- (1) Top view.
- (2) Side view showing greatest length.

(E) Hand Wheel. (Cast Iron.)
- (1) Top view.
- (2) Side view (half in section).

(F) Valve Disc. (Bronze.)
- (1) Top view.
- (2) Side view (half in section).

(G) Valve Seat. (Bronze.)
- (1) Top view.
- (2) Side view (half in section).

(H) Valve Stem (Bronze) 2 views.

(I) Disc Nut (Bronze) 2 views.

(J) Bolt List, giving diam. length, number reqd., description and location.

Safety Valve

Views to be drawn.

(*A*) Same as globe valve.
(*B*) " " (views 1 and 3 only).
(*C*) YOKE (Cast Iron), 3 views.
(*D*) LOCK NUT. (W. I.), 2 views.
(*E*) LEVER. (W. I.) "
(*F*) Same as globe valve.
(*G*) " "
(*H*) " "
(*I*) " "
(*J*) " "
(*K*) Fulcrum pin, (Steel) 2 views.
(*L*) Stem top (C. I.) 2 views.
(*M*) Ball (C. I.) 2 views, with wgt. of ball given.

Test Questions (Working Drawings)

1. (*a*) What constitutes a working drawing?
   (*b*) Dimension fully the sketch (Fig. 1), scaling all dimensions.
2. Give method of procedure followed in tracing a drawing.
3. What is a working drawing? Give an outline of the operations performed in making one.
4. In tracing a pencil drawing what kind of line will you use for: center lines, section lines, dimension lines, invisible lines, outlines, extension lines. How do you place numerals for different directions of dimension lines? Illustrate and use fractions.

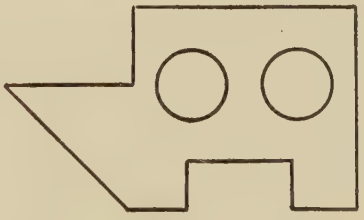

FIG. 1.

5. (*a*) Describe the kind of line to use for each of the following cases, center line, extension line, dimension line, section line, border line.
   (*b*) Give a list, in order of procedure, of the operations in making a tracing of a working drawing.
6. What is a working drawing? Explain the method of making a tracing and order of procedure in inking in.
7. What is a working or shop drawing? Illustrate by a sketch drawn to scale.

Test Questions (Rivets)

1. (*a*) Sketch in good proportion these rivet heads—cone, pan, countersunk, button.
   (*b*) Draw two views, to scale, of a single riveted lap joint, plates $\frac{3}{8}''$ thick, calculating first the size of rivet and pitch. Rivets are button headed. $P-d=3.43''$.
   (*c*) Sketch a Z bar, channel and angle iron and give the terms used in speaking of each of them.
2. What heads are used for boiler riveting? for structural iron work?
3. What is a lap joint? a butt joint? single riveting? double riveting? Which ones are used in boiler joints?
4. What is a gauge line? How is it located on a channel? on a Z bar? on an I beam?
5. Sketch the connection between two plates placed at right angles.
6. What is the difference in diameter between a rivet and the hole in the plates which it fastens together? Which diam. is the one calculated in the formula $d=K\sqrt{T}$? If $K=1.5$ show how to find the diameter d from a diagram when the value of (T) is given.

Test Questions (Pipes and Fittings)

1. (*a*) What is the difference between the actual and nominal inside diameter of a pipe, and what caused this difference.

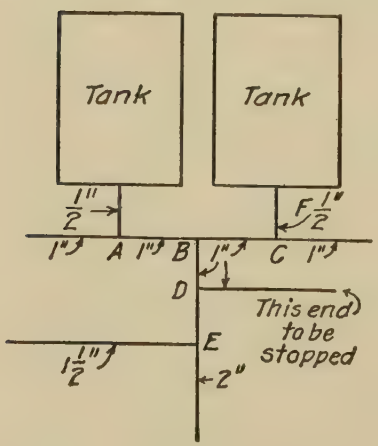

Fig. 1.

   (*b*) In the following system of piping (Fig. 1) specify the sizes and give the names of fittings needed to properly connect up the same.
   (*c*) Optional (what fittings are needed, and where would you place them—so that the tanks can be filled separately or both at the same time?).
   (*d*) Sketch a plug, a cap, a close nipple. What is the purpose of the union?
2. (*a*) What use is made of cast iron fittings for W. I. pipe and what are the names of the common ones? Sketch a reduc. tee.

(*b*) How is the size of a pipe expressed and what is the meaning of the name $1'' \times \frac{1}{2}''$ reducing tee?

3. Explain the cause of the difference between the nominal size of a pipe and the inside and outside diameters and give the name of each fitting that you have drawn and explain the use of each one.
4. Sketch and describe (*a*) a union; (*b*) a C. I. pipe flange.
5. The system of wrought iron pipes of Fig. 2 is to be connected by cast iron fittings. Where would you place them and what names would you use for each one if you had to order them?

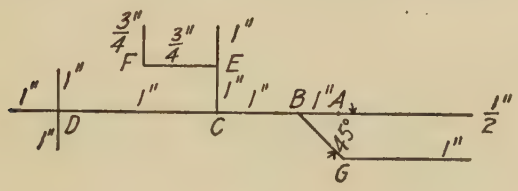

Fig. 2.

6. (*a*) What are pipe fittings and of what use is a scale of fittings?
   (*b*) What is the meaning of the term "nominal size of a pipe" and what use is made of it?
7. Indicate the pipe fittings (names) to be used on the accompanying sketch of piping (Fig. 3). All pipe 2" except where noted.

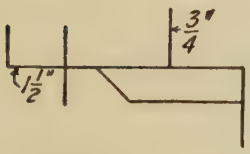

Fig. 3.

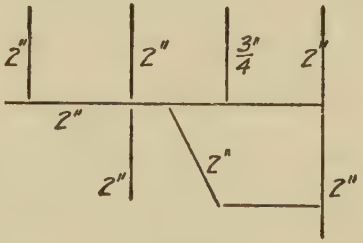

Fig. 4.

8. Give the names of the fittings required on the pipe line shown in Fig. 4 at *A*, *B*, *C*, *D*, *E*, *F*, *G*, in order to connect pipes of the sizes indicated.

Test Questions (Screw Threads)

1. (*a*) Into what two general classes are screw threads divided? Give two examples of each class. Define and explain in general terms how the pitch of a screw thread is determined.
   (*b*) Draw to scale and dimension a U.S.St. screw thread, pitch $1\frac{1}{2}''$.

(*c*) Show the conventional method of representing L.H. screw threads. How can a screw of given diameter be made stronger? Give reasons why, and explain how, a pipe thread differs from a screw thread.

2. (*a*) What are the principal forms of threads used in machine construction? Draw the outlines of the threads, using any pitch.
   (*b*) What is the difference between a single and double thread?
3. How does a pipe thread differ from the thread on a bolt and why?
4. Draw the outline of each of the various kinds of thread you are familiar with and give the name of each one. Pitch = 1″ in all cases.
5. Draw to scale a U. S. St. thread, V thread and mod. sq. thread, pitch = 1″.
6. Draw 2 threads of a V threaded screw, $\frac{1}{4}$″ pitch, $1\frac{1}{2}$″ diam. Draw 2 threads of a square threaded screw, $\frac{3}{16}$″ pitch, $1\frac{1}{2}$″ diam. Draw the conventional V thread on a $\frac{3}{4}$″ diam. cyl.
7. (*a*) Explain "pitch."
   (*b*) Explain what is meant by "triple thread," and show how the pitch is measured.
8. (*a*) Make a neat free-hand sketch of a modified square thread, giving correct proportions of all dimensions.
   (*b*) Make a sketch of a left handed screw end, conventional method.
9. (*a*) What is the "pitch" of a thread.
   (*b*) What is a "double" thread?
   (*c*) What is a left hand thread?
   (*d*) What "lead" has a double thread when there are 8 threads per inch?
10. (*a*) Draw, free hand the profile of a U. S. St. thread of 1″ pitch, giving the relative proportions.
    (*b*) Show how to represent a conventional sq. thread on a bolt.
11. (*a*) Draw, freehand, the profile of a modified sq. thread, 1″ pitch, giving relative proportions.
    (*b*) How is a sq. thread drawn conventionally on a cylindrical rod.
12. What is "pitch," triple thread. How do you indicate V or U.S.St. threads on a drawing to show left or right hand and number of threads per inch.

Test Questions (Bolts and Screws)

1. Draw a $\frac{3}{4}$″ hex. hd. U. S. St. bolt without nut when the grip is $1\frac{1}{2}$″. Give *all* dimensions and make the three views commonly used on drawings.
2. Draw a $\frac{3}{4}$″ stud bolt (without nut) having a grip of $1\frac{1}{2}$″. Thread

it by conventional method, give length of thread and indicate where nut is placed.

3. Show two views (end and side) of a $\frac{5}{8}''$ set screw, oval pt. (dimensioned).
4. Make a neat sketch of the following:
   (*a*) Fillister head screw.
   (*b*) French head screw.
   (*c*) Rivet with button head and pan point.
5. Make a sketch (freehand) of a locknut for a bolt and give the relative dimensions (3 views). Same for set screw (cup point) two views.
6. (*a*) Give the formula for F (distance across flats) of a U. S. St. bolt head and nut, and thickness T for the nut.
   (*b*) How far does a bolt enter a tapped hole.
7. Draw the three views usually used to represent a U. S. St. hex. nut for a $1''$ bolt (chamfer conventionally) and give dimensions.
8. What is a cap screw? a stud bolt? a tap bolt? and how do they differ?
9. (*a*) Describe and name the different machine fastenings on which screw threads are used.
   (*b*) What types of threads are used commonly.
   (*c*) What is the difference between a tap bolt and a stud bolt and in what cases is one preferable to the other.
10. A $\frac{3}{4}''$ stud bolt without nut, is needed to replace a broken one which had a U. S. St. nut. The grip is $1''$. How would you order the new one by sketch, knowing only what is given above?
1. Draw 3 views of a U. S. St. nut for a $\frac{3}{4}''$ bolt (10 thrds.), using the conventional method and giving all the dimensions necessary for making it.
12. (*a*) What is a U. S. St. bolt and what is the thickness of nut?
    (*b*) What is a set screw used for? Make a sketch of one.
    (*c*) What is a stud bolt and a tap bolt and how do they differ?
    (*d*) What is "chamfer" and why are bolt and screw heads "chamfered"?
13. The distance across flats of a bolt head on a $1''$ bolt is $1\frac{5}{8}''$. That on a $4''$ bolt head is $6\frac{1}{8}''$. Find the constants to use in a straight line formula, for finding this distance on other bolt heads.
14. What is the difference between a hex. hd. cap screw and a tap bolt, and why is a cap screw preferable?
15. Show 2 views of a sq. hd. bolt with hex. head. U. S. St. Diam. $= 1''$. $d = \frac{3}{2}D + \frac{1}{8}''$. $h = \frac{d}{2}$.
16. What three types of machine screws have you drawn, and how far is it customary to tap them into metal when used for fastening?

17. (*a*) What is a Penn nut and why is it used?
    (*b*) Sketch two forms of set screw, one of them used to safeguard workmen from injury.
    (*c*) Sketch a fillister hd. machine screw.
    (*d*) What determines the length of a stud bolt.
    (*e*) How does a hex. hd. cap screw differ from a tap bolt?
    (*f*) How are bolt ends finished (sketch).
    (*g*) When is a stud bolt used in preference to a U. S. St. bolt and nut?
18. (*a*) Construct three views of a hexagonal head bolt and nut $D = 1''$.
    (*b*) What is the difference between a tap bolt and hexagonal head cap screw?
19. (*a*) Show an inch of V thread (left hand) on a $1\frac{1}{4}''$ bolt.
    (*b*) Show an inch of modified square thread on a $2''$ bolt.
    (*c*) Show three views of a hexagonal nut for a $1''$ bolt, using the conventional method.
    (*d*) State the differences between a stud bolt, tap bolt, set screw and hexagonal head cap screw.
20. Draw a tap bolt $\frac{3}{4}''$ in diam. threaded $1''$ on the end, $2\frac{1}{2}$ long, sq. thread.
21. Show top and side view of a $\frac{7}{8}''$ stud bolt and nut. The stud to be of the proper length to fasten a plate $1\frac{1}{2}''$ thick to a flat surface.
22. Describe a hexagonal head bolt and nut and make a drawing of a $1\frac{1}{2}''$ bolt with a grip of $1''$.
3. How does a tap bolt differ from a stud bolt and how far is it customary to tap into metal to receive the end of the bolt?
23. Draw top and side views of a U. S. St. nut for a $1''$ bolt.
24. How do the dimensions differ on a U. S. St. bolt head and a nut?
25. Name types of fastenings used in machine drawing. Give dimensions of a tapped hole, also give formulæ for dimensions of standard keyways.

Test Questions (Keys)

1. (*a*) Sketch a sunk key in a $2''$ shaft (end view) and give its dimensions.
   (*b*) What is a Woodruff key? Sketch shape of it.
2. What is a sunk key? When used? What proportions? Illustrate how set in a shaft (end view).
3. Draw to scale a sunk key for $2''$ shaft when $W = \frac{3}{16}D + \frac{1}{8}$, $T = \frac{3}{32}D + \frac{1}{8}''$ and key is $3''$ long. (Dimension this.)
4. Construct three views of a shaft $2''$ in diameter, having a key $3''$ long set in it. Give the dimensions of key.
5. Show the depth of keyway for a $2''$ shaft and where this depth would be measured.

6. The width of a key for a 2″ shaft is $\frac{1}{2}$″ and its thickness is $\frac{5}{16}$″. For a 4″ shaft the corresponding dimensions are $\frac{7}{8}$″ and $\frac{1}{2}$″. Deduce the formulæ to be used to determine the width and thickness of keys for any diameter of shaft from 1″ to 4″.
7. Show 2 views of a keyway, 2″ long, in a 2″ shaft $\left\{\begin{matrix} W=\frac{3}{16}D+\frac{1}{8}'' \\ t=\frac{3}{32}D+\frac{1}{8}'' \end{matrix}\right\}$.
8. Draw a key for a $1\frac{1}{2}$″ shaft set in the keyway of the shaft. Length of key 2″. $W=\frac{3}{16}D+\frac{1}{8}''$, $T=\frac{3}{32}D+\frac{1}{8}''$.
9. Deduce the formulæ $W=\frac{3}{16}D+\frac{1}{8}''$ and $T=\frac{3}{32}D+\frac{1}{8}''$ knowing values of W and T as follows:
   For 2″ shaft $W=\frac{1}{2}''$, $T=\frac{5}{16}''$, for 4″ shaft $W=\frac{7}{8}''$, $T=\frac{1}{2}''$.
10. (*a*) Make sketch of plain key (sunk), with parallel sides L'' long, W'' wide, T'' thick.
    (*b*) Give the formulas for W and T.

Test Questions (Shafts and Couplings)

1. The diam. of the hub of a flange coupling for a 2″ shaft is 4.4″. The diam. of the hub for a 5″ shaft is 9.8″. Deduce the constants for the straight line formula $B=\alpha D+\beta$, and find the diam. of hub for a 3″ shaft.
2. What is a flanged coupling and how many pieces are there in one where four bolts are used?
3. If a shaft coupling for a 2″ shaft has a distance $6\frac{3}{4}$″ from center to center of bolt holes and for a $4\frac{1}{2}$″ shaft coupling a distance of $12\frac{1}{2}$″, what distance must a shaft coupling of 3″ have? Solve this by the deduction and use of the straight line formula.
4. Calculate the diameter of a W. I. shaft to transmit 10 H.P. at 300 R.P.M.
5. Calculate the diam. of shaft to transmit a force of 1000 lbs. applied at the end of a lever 20″ long when the lever is keyed to the shaft. Shaft of W. I.
6. Calculate the shearing strain on the bolts of a coupling for a $2\frac{1}{2}$″ shaft.
7. Calculate the shearing strain on the bolts in a Hookes joint for a $1\frac{1}{2}$″ W. I. shaft.
8. Sketch a claw coupling and explain its function.

Test Questions (Stuffing Boxes)

1. How is it possible to prevent leakage of steam around the piston rod of an engine without excessive friction? Make a sketch of one of the component parts of the device for reducing this friction when

the piston rod is 2″ diam. $S = \frac{1}{8}D + \frac{3}{8}''$, $H = 4S$, $a = S$. (No *section* required, outside views only.)

2. Explain the function of a stuffing box and illustrate either one of the two types of box. Draw to scale and dimension the gland only of a screw cap stuffing box for a 1″ rod. $H = 4S$, $S = \frac{3}{16}D + \frac{1}{4}''$. (Make outside views only.)
3. Describe a stuffing box and illustrate by sketches what the function of the gland is.
4. State the conditions which require the use of a stuffing box and give two cases where boxes are used. What is the gland and what relation does its length bear to the length of the packing space?
5. A stuffing box is designed for a 1″ shaft. $S = \frac{5}{16}D + \frac{1}{8}''$. Show a gland for this box when $H = 5S$.
6. Describe a stuffing box and draw the gland of a screw stuffing box for a $\frac{7}{8}''$ rod. Dimension this completely.
7. Draw and dimension the *gland* of a screw cap stuffing box for a 1″ shaft.

   Length of packing space $= H = 4S$.
8. What is a stuffing box? and what styles do you know about?
9. Enumerate the parts of a screw cap stuffing box and sketch each one. What is the unit for the principal dimensions? When is the maximum length of gland and packing space used? When the minimum?
10. Sketch approximately to scale the gland for a bolt type of stuffing box.
11. How is the length of stud bolt determined in a bolted gland stuffing box?

Test Questions (Bearing Box)

1. The distance from the center line of a 2″ bearing box to the center of stud bolt is 1.788″. The corresponding distance for a 5″ box is 3.978″. Deduce the constants for the straight line formula $b = \alpha D + \beta$, and find this distance for a 3″ box.
2. A bearing box cap for a 2″ diam. shaft is $\frac{11}{16}''$ thick. A bearing box cap for a 5″ diam. shaft is $1\frac{1}{4}''$ thick. Find the constants α and β for the straight line formula to use in obtaining intermediate sized caps.
3. The stem of a 3″ valve is $\frac{5}{8}''$ diam., while the stem of a 6″ valve is 1″ diam. Find the constants α and β to use in a straight line formula. Find the size of stem for a 4″ valve and check the value by a scale.
4. Explain how the formula (required dimension $= \alpha S + \beta$) is obtained and its use in machine design.

5. Construct a scale for bolt heads and nuts (U. S. St.).
6. Using the straight line formula $d = \alpha D + \beta$, show how the values of α and β may be found in the formula $d = \frac{3}{2}D + \frac{1}{8}$, taking two values of d from the tables.
7. What use is made of the straight line formula in designing machine parts and how would you determine the constants to use in it for a particular dimension?
8. Explain a bearing box, also construction and use of the scale of dimensions.
9. Construct a scale for width and thickness of keys for shafts from 1″ to 5″. $w = \frac{3}{16}D + \frac{1}{8}''$. $t = \frac{3}{32}D + \frac{1}{8}''$.
10. Calculate the foot-lbs. of work lost in a bearing when the shaft diam. is 3″, length of bearing = 9″, pressure per inch of projected area = 75 lbs. R.P.M. = 200. Shaft horizontal, load vertical. $c = .43$. v = veloc. in ft. per sec. $\mu = \dfrac{(c\sqrt{v})}{p}$.
11. Make a working sketch of the cap of a bearing box assuming all dimensions, in good proportion. Show three views and put on dimension lines.
12. (*a*) How does a bearing box differ from a pillow block?
    (*b*) What metal is used as a bearing surface in the former?
13. What is a pillow block and what arrangement is made for adjustment across the line of the shaft?

Test Questions (Hangers, Ball and Roller Bearings)

1. Determine the distance apart for hangers to support a $2\frac{1}{2}''$ shaft, making 200 R.P.M. What will be the deflection?
2. What is a hanger? How is it adjustable and for what purpose? What is a "Sellers" hanger? How does the bearing of a hanger adjust itself to the line of the shaft? What is the "drop" of a hanger?
3. Enumerate and describe the component parts of a hanger.
4. Describe the arrangement of parts in a ball bearing hanger. What are the great advantages of ball bearing hangers over plain bearing hangers?
5. What provision is made in the Sellers type of hanger for placing the shaft in the hanger or vice versa?
6. How are hanger bearings automatically lubricated? Sketch a system of automatic lubrication.
7. What is a post hanger? A wall bracket?
8. Describe a roller bearing? How is it applied to a pillow block? Enumerate the parts of a ball bearing pillow block.

9. Draw a section of the inner and outer races of a ball bearing and show how the inner race is tightly fastened to the shaft.
10. Explain the forms of contact of the revolving shaft with the three kinds of bearings, plain, ball, and roller.

Test Questions (Pistons and Piston Rods)

1. Describe in detail (*a*) the various forms of pistons, (*b*) how they are fastened to the piston rods and the (*c*) methods of keeping them tight. (*d*) What is the function of a wrist pin?
2. A piston rod $1\frac{3}{4}''$ diam. is screwed into a crosshead by being threaded with 10 thds. *p. i.* (depth of thread = .065″). What steam pressure can be used if the piston diameter is 10″ and the max. unit stress in the rod is not to exceed 4500 lbs. per sq.in.? What will be the unit stress in the unthreaded portion of the rod?
3. (*a*) What is a piston?
   (*b*) How is leakage past it prevented?
   (*c*) Sketch two ways of fastening a piston to a piston rod.
   (*d*) What is a trunk piston and where is it used?
4. An engine has a cyl. bore of 10″ and a stroke of 12″. The connecting rod length is $2\frac{1}{2}$ times the stroke. The piston rod is 2″ diam. threaded 10 thds. p. i. (depth of thread = .065). The crosshead bearing surfaces have an area of 60 sq.in. When these surfaces are carrying a max. pressure of 30 lbs. per sq.in. calculate (*a*) the steam pressure in the cyl., (*b*) the unit stress in the piston rod at least section.
5. An engine with 12″ bore, 14″ stroke, carries steam at 100 lbs. pressure. The connecting rod is 40″ long. Calculate the diam. of piston rod (outside) ($f_t = 4500$) 10 threads per in.
6. What are Ramsbottom rings? How are they prevented from leaking? Of what material are they made?
7. Calculate the weight of a C. I. piston 10″ diam. made as in Fig. 121.
8. Calculate the weight of a C. I. trunk piston 6″ diam. made according to the proportions in Fig. 123.

Test Questions (Crossheads)

1. Calculate the area of bearing surfaces for a crosshead for a 11″×14″ horizontal engine whose connecting rod length is 3 times the stroke. The steam pressure is 100 lbs. per sq.in., the maximum pressure on the bearing surfaces of the crosshead is 30 lbs. per sq.in., and the ratio of length to width of these surfaces is 4 to 1. The type of crosshead to be like the one you have drawn which requires two guide bars on each side.

2. The sliding surfaces of an engine crosshead have an area of 60 sq.in. The engine has a cyl. 10″ diam. and the stroke is 14″. The steam pressure is 100 lbs. per sq.in. The length of conn. rod is 3 × stroke. Find the max. pressure per sq.in. on the sliding surfaces.
3. Calculate the area of sliding surface for the crosshead for an engine whose cyl. is 10″ diam., stroke = 14″. Steam pressure 100 lbs. per sq.in. Maximum pressure on sliding surfaces to be 30 lbs. per sq.in. Length of connecting rod = 3 times stroke.
4. An engine is 10″ × 14″. Length of connecting rod is 5 × crank. Pressure on piston = 90 lbs. per sq.in. Allowed maximum pressure on bearing surface of crosshead is 30 lbs. per sq.in. Find the area of the bearing surface of the crosshead and the maximum pressure on the crank pin.
5. (*a*) How long c. to c. would you make a connecting rod for a 12″ × 14″ engine if ratio of conn. rod to crank is 7 to 1?
   (*b*) On same engine what area of bearing surface would you have, allowing a maximum pressure on guides of 30 lbs. per sq.in., where the pressure on the piston is 120 lbs. per sq.in.?
6. What would be the area required for the rubbing surface of a crosshead in a 12″ × 12″ engine, the length of connecting rod being 4 times the stroke, steam pressure being 100 lbs. and allowable pressure 40 lbs. per sq.in.
7. An engine 8″ × 10″ has a conn. rod 6 × the stroke. Pressure on the piston is 100 lbs. per sq.in. Find max. pressure on guides.
8. A gasoline engine is $4\frac{1}{4}$″ bore × 6″ stroke and the connecting rod is 15″ long. The length of piston = its diam. Find (*a*) the max. pressure of the piston against the cyl. wall when the explosion pressure = 350 lbs. per sq.in. (*b*) Find the pressure per sq.in. of projected area of wrist pin when the pin diam. = .2D and its length is 0.5D.
9. A gasoline engine has 4″ bore, 6″ stroke, length of connecting rod = $2\frac{1}{2}$ times stroke. The piston length equals its diameter. The wrist pin diameter = 0.2D. Its length between supports is $\frac{1}{2}D$. If the explosion pressure in the cyl. is 300 lbs. per sq.in., calculate (*a*) the max. thrust of the piston against the cyl. walls (in lbs. per inch of projected piston bearing area). Calculate (*b*) the pressure per inch of projected area on the wrist pin.

Test Questions (Connecting Rods)

1. The diameter of a connecting rod at the smallest place is 2″. The strap is $2\frac{1}{2}$″ wide and the key which passes through the strap is $\frac{3}{4}$″ thick.

Calculate the thickness (a) of the strap and the length (m) of strap between the gib and end of strap. The area for shear is $\frac{4}{3}$ the area for tension.

2. The strap of a connecting rod is $2\frac{1}{2}''$ wide in a direction parallel to the axis of the crosshead pin. The key and gib are $\frac{3}{4}''$ thick in the same direction. Compute the thickness of strap and the combined width of key and gib when the least diameter of the connecting rod is $2\frac{1}{8}''$. The area to resist shear $=\frac{4}{3}$ the area to resist tension.
3. The strap for the crosshead end of a connecting rod is $2\frac{1}{4}''$ wide, measured parallel to the axis of the crosshead pin. The hole for the key and gib is $\frac{3}{4}''$ wide measured in the same direction. The smallest diameter of the connecting rod is $2''$. Calculate the thickness of strap and length of hole for key and gib, making a sketch to show what you have calculated. Area for shear is $\frac{4}{5}$ area for tension.
4. Calculate the dimensions a–b–c–d of the end of the conn. rod shown in Fig. 1. Shearing strength $=75\%$ of tensile strength.

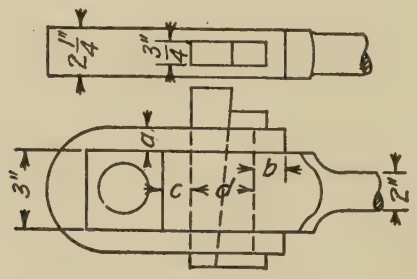

Fig. 1.

5. Calculate the dimensions (a) and (b) for the conn. rod end shown in Fig. 2. The shearing strength is $\frac{4}{3}$ the tensile strength.

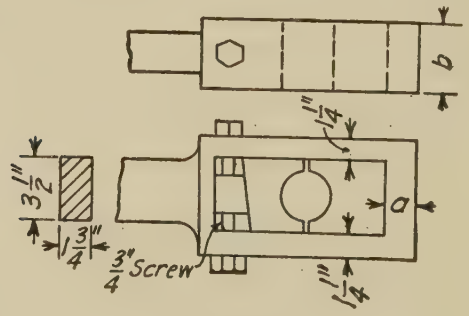

Fig. 2.

6. Calculate the values of *m–n–o–p* on the end of the connecting rod shown in Fig. 3. The area in shear is to be 1.4 the area in tension.
7. Calculate the dimensions *a–b–c–d* for the rod end shown in Fig. 1. Shearing strength to be 60% of the tensile strength.

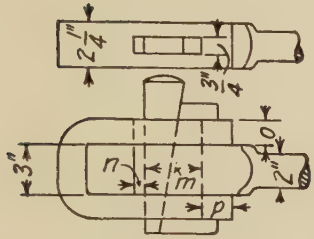

Fig. 3.

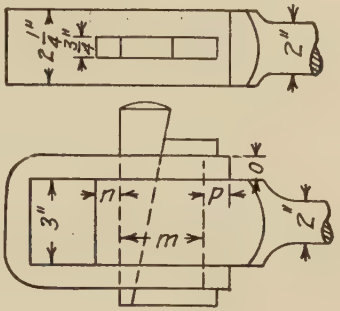

Fig. 4.

8. Calculate the value of *p* when the shearing surface is to be 1.35 × the tension surface. See Fig. 4.
9. Sketch the strap end of a conn. rod, name each part and designate the points where it is liable to break.
10. Make 3 views of the *cap* only of the conn. rod end shown on the accompanying drawing (to scale). (Provide a crank end drawing.)
11. Make a *working* drawing, properly lettered and dimensioned, of one of the *brasses* of the crank end of this connecting rod. (Sketch or plate furnished for this.)
12. Calculate *m–n–s–a* of the rod end shown in Fig. 5. The shearing strength is 50% of the tensile strength.
13. Sketch the strap and one of the brasses for the crosshead end of a connecting rod.
14. Calculate the size of crank pin for a 11″ × 12″ engine, steam pressure 100 lbs. sq.in. Connecting rod length = 6 × crank. Bearing pressure on pin 300 lbs. per in. of projected area. Length of pin equals diameter.

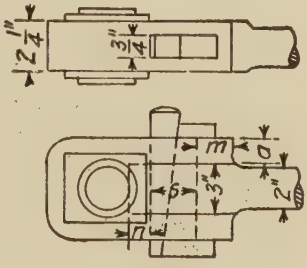

Fig. 5.

Test Questions (Engine Cranks)

1. An engine with bore of 12″, stroke 14″, carries steam at 100 lbs. pressure. The connecting rod is 40″ long. Calculate the following:
   (*a*) Diam. and length of crank pin (bearing pressure = 1000 lbs. per inch). Length of pin = 1.5 × diam.
   (*b*) Calculate diam. of crank shaft, allowing a value for $f_s = 9000$.

$$FR = \frac{D^3 f_s}{5.1}.$$

   (*c*) If the crank has the following dimensions (Fig. 1) find the value of (*f*) when

$$f = \frac{3(B + \sqrt{B^2 + T^2})}{W^2 t}.$$

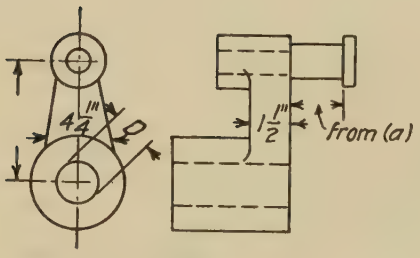

Fig. 1.

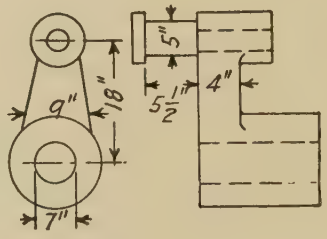

Fig. 2.

2. A crank has the proportions given in Fig. 2:
   (*a*) Calculate the load the crank pin will carry if the bearing pressure on it is 900 lbs. per inch of projected area.
   (*b*) Calculate the stress in the web with the above load.
   (*c*) Calculate the value of f_s in the shaft when the above load is applied to the crank pin.

$$f = \frac{3(B + \sqrt{B^2 + T^2})}{W^2 t}, \qquad FR = \frac{D^3 f_s}{5.1}.$$

3. Determine the proportions of web of a C. I. crank for a 12″ radius The shaft is 4½″ diam. The crank pin is 3″ diam., 3½″ long and carries 1000 lbs. per inch of projected area. The width of web where it joins the hub is 8½″.

Test Questions (Eccentrics)

1. An eccentric rod is 2″ in diam.; what size bolts would be necessary to fasten it to the eccentric strap if 2 bolts were used and allowance was made for threads cut on bolt. 5 threads per inch.
2. What is an eccentric sheave? Draw an eccentric sheave for a 3″ shaft, the eccentricity being 1″ and width of eccentric = 2″,

$$d = 1.2D + 2r + \tfrac{3}{4}''. \quad A = \frac{B}{2}.$$

   Make a view looking at the end of shaft hole, also a side view.
3. Compare the strength of the two eccentric strap bolts and the eccentric rod. The bolts have a diameter of $\frac{3}{4}''$ and the rod a diameter of $1\frac{1}{2}''$.
4. Explain the method of oiling an eccentric, in motion, from a stationary oil cup.
5. Draw to scale approximately, the half of an eccentric strap which fastens to the ecc. rod.

Test Questions (Belting and Pulleys)

1. A belt 5″ wide transmits 6 H.P. while running over a 24″ pulley. Assuming the effective pull per inch of width = 40 lbs., how many R.P.M. does the pulley make?
2. Given, the diameter (16″) and rev. per min. (100) of a pulley and the rev. per min. of a pulley (90) driven from the first, also the horse-power transmitted (4). Find the diameter and width of face of the second pulley.
3. What cross sections are used for the arms of pulleys and gears?
4. An 8 H.P. motor runs at 600 R.P.M. From it a belt runs to a 48″ pulley on a shaft which makes 150 R.P.M. What diameter pulley would you use on the motor and what width of face would it have. Driving pull on belt to be 40 lbs. per inch of width.
5. Sketch a section of the rim of a 24″ pulley to carry a belt to transmit 10 H.P. when it makes 200 R.P.M.

$$t = \frac{D}{200} + \frac{1''}{8}. \quad \text{Crowning} = \frac{B+6}{200}.$$

6. A pulley on a countershaft making 90 R.P.M. is belted to a 30″ pulley which makes 120 R.P.M. (on a pump). The pump requires 2 H.P. to run it. What diam. of pulley is required for the countershaft and what width of belt is required?

7. A belt 10″ wide runs on a pulley 24″ diam. which makes 100 R.P.M. What horse-power is it transmitting when the driving pull on the belt is 40 lbs. per inch of width?
8. A 3 H.P. pump is to be driven by a belt from a countershaft pulley to a pulley 30″ diam. on the pump. The countershaft makes 90 R.P.M. and the pump pulley 120 R.P.M. Find the diam. of countershaft pulley and width of belt to use.
9. A pulley 24″ diam. makes 100 R.P.M. The width of face is $6\frac{1}{2}$″. What H.P. is transmitted by the belt running over this pulley when the effective driving pull is 40 lbs. per inch of width?
10. Calculate width of belt to run on a 20″ pulley, making 200 R.P.M. and transmitting 5 H.P.
11. (*a*) Why is the face of a pulley sometimes crowned?
    (*b*) Why is a set screw used in addition to a key for securing a pulley to a shaft?
12. Find the R.P.M. of 39″ and 60″ pulleys when the belt between them is 6″ wide and transmits 4 H.P.
13. In the sketch shown a circular saw is to run at 1000 R.P.M. and deliver 6 H.P. *B* is a pulley on a gasoline engine making 450 R.P.M. *C* and *D* are on a countershaft. *D* is 24″ diam. *B* is 22″ diam. *E* is 12″ diam. What must be the diameter of *C*? What will be the width of single belt to use between *B* and *C* and between *D* and *E*?

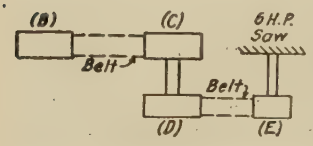

14. A belt 5″ wide transmits 6 H.P. while running over a 24″ pulley. Effective pull per inch of width = 40 lbs. How many R.P.M. does the pulley make?
15. A pulley on a countershaft makes 90 R.P.M. and the belt from it runs a 2 H.P. pump pulley 30″ diam. 120 R.P.M. What diam. pulley is needed on the countershaft and what width belt will you use?
16. A pulley 16″ diam. making 100 R.P.M. transmits 8 horse-power. What is the width of face?
17. Two pulleys are 34″ and 20″ diam. and their centers are 36′–0″ apart. What H.P. will be transmitted if the larger pulley makes 110 R.P.M. and the initial tension is 460 lbs. $\mu = .3$. How wide a belt will you use?

$$\text{Log}\frac{T_t}{T_s} = 0.007578\mu\theta \qquad \theta = 180° - 2\phi. \quad \sin\phi = \frac{R-r}{l}. \qquad T_t + T_s = 2T_i.$$

Test Questions (Spur Gears)

1. In the hoist shown in Fig. 1 the C. I. pinion makes 150 R.P.M. The face of the gears is to be $3P$. Determine the circular and diametral pitches and H.P. the gears will transmit.

Formulæ for Gearing:

$$F = SPby\frac{600}{600+V},$$

$$y = .124 - \frac{0.684}{N},$$

2. The drum of a hoisting engine is 36″ in diameter. A gear fastened to the end of the drum shaft is 42″ pitch diameter. The driving gear which meshes with this is 14″ pitch diameter and makes 200 R.P.M. The maximum load to be lifted at this speed is 1200 lbs.

Width of face of gears is $2\times P$.

Determine the circular pitch, diametral pitch, No. of teeth in each wheel, addendum and dedendum, and draw the *blank* for the small gear.

Diametral pitches are 1, $1\frac{1}{2}$, $1\frac{3}{4}$, 2, $2\frac{1}{4}$, $2\frac{1}{2}$, $2\frac{3}{4}$, 3, 4, 5, etc.

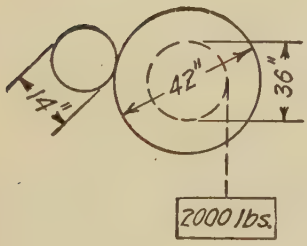

Fig. 1.

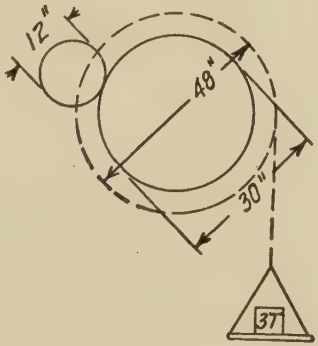

Fig. 2.

3 A hoisting engine has the arrangement of drum and gears in Fig. 2. Max. load to be lifted = 6000 lbs. Pinion makes 200 R.P.M. Find P, p, b, number of teeth, and outside diameter of both gears.

$$b = \text{width of face} = 3P.$$

$$\text{H.P.} = \frac{WV}{33000}. \quad w = SPby\frac{600}{600+V}. \quad y = .1.$$

4. The following train is used for hoisting stone blocks of 2 tons weight at a velocity of 100 ft. per min. On the engine crank shaft is a pinion which gears with a gear on the shaft carrying the hoisting drum. This drum is 36″ in diameter. The gear ratio of the pinion and gear is 1 : 8. What diameters of pinion and gear would you use if 12 was the smallest number of teeth allowed in the pinion and 6 feet the greatest diameter allowed for the gear. Find P, p, number of teeth in each gear, addendum, dedendum, width of face, and outside diameter of the larger gear.
5. A C. I. gear 36″ diam., 3″ face, 3 pitch is keyed to a hoisting drum shaft which is used to hoist loads of 2000 lbs. 600 ft. per min. The drum is 42″ diam. Are the gear teeth strong enough for this work? Prove your statement.
6. Construct a cycloidal tooth. Diameter of pitch circle 12″. Describing circle 2″ diam. Pitch = 1″.
7. (*a*) Find the diam. of pulley on shaft (*A*) and width of belt to use to run between the pulleys. Fig. 3.

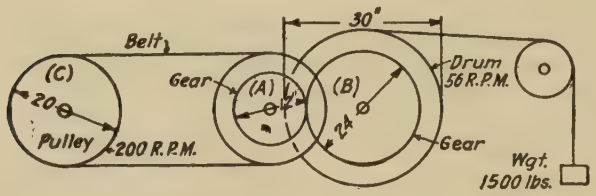

FIG. 3.

(*b*) What will be the circ. pitch and diametral pitch of the gears? Width of face = $3P$.

(*c*) What will be the vel. of the wgt. and the H.P. transmitted?

8. A weight of 2100 lbs. is raised by a chain passing around a drum 36″ diam. making 40 R.P.M. The spur gear on the drum shaft is 30″ diam. and is driven by a gear 24″ diam. Find for the latter its diametral and circ. pitches, number of teeth, width of face, addendum, dedendum, and outside diam. Width of face = $3P$.
9. Two gears 20″ and 32″ diam. mesh. The smaller makes 100 R.P.M. The pressure on the teeth is 1000 lbs. What H.P. is transmitted, and what is P, p, number of teeth, and outside diam. of each wheel. Width of face = $3 \times P$.
10. Design a spur gear rim for a gear to transmit 20 H.P. when it is 36″ diam. and makes 100 R.P.M. Width of face = $b = 2P$. Give circ. pitch, diametral pitch, number of teeth, outside diam., depth of teeth.

11. Find the circ. pitch, diam. pitch, outside diam., number of teeth, depth of teeth, width of face of gear C, when $W = 2000$ lbs., and A makes 200 R.P.M. Width of face $= 2P$. Fig. 4.
12. Calculate the allowable load on a spur gear tooth of 4 diametral pitch 30″ in diameter. using a static stress of 8000 and a tooth length of $3P$. What H.P. will this gear transmit, when rotating at 100 R.P.M.?

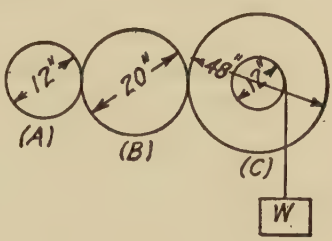

Fig. 4.

13. A spur gear 20″ diameter transmits 10 H.P. when it makes 90 R.P.M. Find the circular pitch, diametral pitch, addendum, dedendum, and outside diameter of gear blank.
14. A spur gear transmits 10 H.P., pitch diameter 20 inches, width of face $6\frac{1}{4}$ inches, circular pitch 3.14 inches. How many R.P.M. does it make? What is its diametral pitch, addendum, depth of tooth and outside diameter?
15. Explain the involute system of gear teeth profile construction with sketch.

Test Questions (Bevel Gears)

1. A train of hoisting mechanism consisting of two spur gears, 2 bevel gears and a drum, is to raise weights at a velocity of 470 ft. per min. Find the max. load which can be raised at this speed with the sizes of cast iron gears, shown in sketch, neglecting friction.

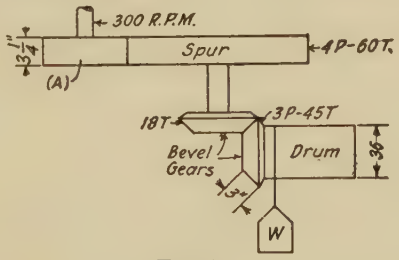

Fig. 1.

Find diam. of spur pinion (A) and calculate the diam. of shaft to use in it.

$$W = SPby. \quad y = 0.124 - \frac{0.684}{N}. \quad d = 2.87\sqrt{\frac{\text{H.P.}}{N}}.$$

2. A pair of bevel gears with shafts making an angle of 75° has 36 teeth in large gear, 20 teeth in small gear, 2 pitch. Make a layout of above, $\frac{1}{4}$ scale, indicating by note, pitch cone, normal cone. Calculate pitch diameters of both gears, and velocity ratio,
3. The shafts of two bevel gears intersect at an angle of 60°. The velocity ratio of the shafts is 3 : 1. The larger gear is 24″ diameter. 2 pitch. The shaft of the smaller gear is 1″ diameter. Thickness of rim at base of teeth at the large end is 0.56 P. Draw the *blank* for the small gear, giving dimensions. Width of face $= 2P$.
4. Two bevel gears 12″ and 18″ diam., 3″ face, 4P, are transmitting power between two shafts at 90° and the larger gear is making 90 R.P.M. What H.P. will they safely transmit? Prove all statements.
5. Two shafts are connected by bevel gears. The vel. ratio is 3 : 1. The shafts meet at an angle of 75°. The larger gear is 18″ diam. and has 54 teeth. Width of face is 3″. Draw the blank for the smaller gear. Calculate the H.P. of these gears.
6. Two bevel gears connect two shafts whose velocity ratio is 3 : 2. The angle between the shafts is 75°. The larger gear is 12″ diam., 3P. Find the diam. of smaller gear and No. of teeth in each gear, also the angle the pitch cone of the larger gear makes with the axis of the shaft.
7. Two bevel gears have a vel. ratio of 2 : 1, and their shafts meet at an angle of 75°. Small gear shaft is $1\frac{1}{2}$″ diam. Width of face = 3P. Depth of rim below teeth at large end is 0.56 P. Larger gear is 12″ diam. 3 pitch. Draw small gear blank.
8. Give the outside diam. of a bevel gear, 3 pitch, 45 teeth, when the angle θ between the axis and pitch cone is 30°. What is the tangent of the angle the face makes with the axis?
9. Two shafts meet at right angles and their velocity is 2 : 1. The larger of the bevel gears connecting the shafts is to have 30 teeth, 2P. How many teeth will the small gear have and what pitch diam.? Draw the *blank* for the small gear when width of face $= 2 \times P$, depth of metal under teeth at large end $= .5P$, and the shaft is 2″ diam.
10. A bevel gear has 30 teeth, 3 pitch, and the angle between the side of the pitch cone and the axis is 30°. Length of face is 2P. Shaft diam. $= 1\frac{1}{2}$″. Depth of metal under teeth $= .57P$. Draw and dimension the blank.
11. Show the blanks for two bevel gears. Shafts meet at an angle of 75°. Larger gear has 34 teeth, 2 pitch and veloc. ratio is 1 to 2.
12. Construct the outline of two bevel gears in position for transmitting motion. One has 36 teeth, the other 12 teeth; 2 diametral pitch. b = twice the circular pitch. Angle of shafts = 60°.

13. Make a drawing of the gear blank, without hub, for a bevel gear whose pitch diameter is 16 inches and which has 48 teeth. Length of face of teeth equals twice the circular pitch. The angle of the pitch cone at the vertex with the axis is 30 degrees.
14. A bevel gear has 30 teeth, 3 diametral pitch, and the angle between the side of the pitch cone and the axis is 30°. The length of face of the gear is 2×circular pitch. The diameter of shaft is $1\frac{1}{2}''$. Make a drawing of the gear blank and give the angle the face of the blank makes with the axis of the shaft.
15. Draw the gear blank for a bevel gear having 12 teeth; 2 *DP*. Angle at vertex of pitch cone = 60°.
    Diam. of shaft = $1\frac{1}{4}''$, width of face = 2*P*.
    Depth of metal under teeth = .57 *P*.

Test Questions (Worm and Gear)

1. Two shafts *A* and *B* meet at 75° and their velocity is as 3 : 1. The larger bevel gear has 54 teeth, 18″ *PD*. The width of face is 3*P*. Find the H.P. the bevel gears will transmit, the diam. of shaft *A*. Draw the blank for the bevel gear for that shaft. The pitch of the worm is 1.1″ and its lead is 1.1″. Find the H.P. the worm and wheel will transmit; how large a weight can be raised by a drum 24″ diam., and how large a shaft will be necessary in the worm wheel. (See Fig. 1.)

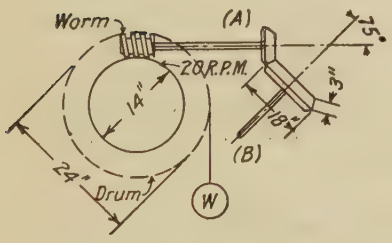

Fig. 1.

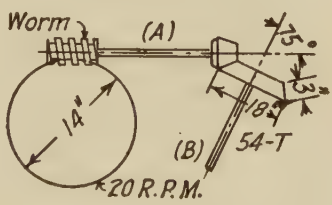

Fig. 2.

2. Vel. ratio of *A* to *B* = 3 to 1. Circ. pitch of worm = 1.1″. Bevel gears and shafts shown in Fig. 2.
   (*a*) How many R.P.M. must (*B*) make?
   (*b*) Which combination (bevel gears or worm and wheel) will transmit the most H.P.? How much is this? Give *all* the calculations necessary to reach your conclusion.

3. Construct the outline of a tooth on a worm wheel. Pitch $= 1\frac{1}{2}''$. Velocity ratio of worm and worm wheel $= 40:1$. Use involute system, approximate method.
4. Worm is $3''$ *PD* and the worm wheel $16''$ *PD*. *P* of worm is $1''$. What is their vel. ratio and No. of teeth in wheel?
5. A worm wheel is $14''$ pitch diameter with teeth of $1''$ pitch. What is the velocity ratio between the wheel and the worm and what is the outside diameter of the worm if its pitch diameter is $3P$?
6. A worm and wheel gear together, their velocity ratio being 48 : 1. If the worm is $1''$ pitch what will be the pitch diameter of the worm wheel?
7. The pitch diam. of a worm is $3 \times CP = 3''$. Pitch diam. of worm wheel is $15.3''$. What is the velocity ratio?
8. Velocity ratio of bev. gear shafts is 3 : 1. Worm wheel has 64 *T* and the worm has a double thread. Find efficiency of worm and wheel. (See Fig. 3.) The diam. of worm is $2\frac{1}{2}P$.

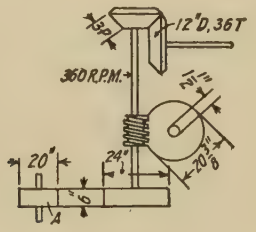

FIG. 3.

(*a*) What H.P. will the bevel gears transmit? Explain carefully how you obtain your answer. Efficiency of bevel gears 96%.
(*b*) Is the worm wheel shaft large enough to transmit the power which the worm wheel will deliver? (Explain by calculation.)
(*c*) Is the belt large enough to run both the sets of gearing? Explain how you reached your conclusion.

Test Questions (Cocks and Valves)

1. Name and describe the parts of an angle or a globe valve, and state the material of each part.
2. Explain a globe, angle, or safety valve and its working.
3. What should be the "lift" of the valve disc in an angle or globe valve to allow the fluid to pass with the same velocity which it has in passing through the circular opening of the seat?
4. Explain the characteristics of the various classes of valves and give an example of each kind of valve in the different classes.

5. What is a check valve? What are the names of each type? Explain the action by means of a sketch.
6. Make a proportional sketch of each of the parts of a check valve.
7. Show by means of a diagram the action of a safety valve. Sketch the moving parts.
8. Explain how to obtain the area of the least opening in a globe or safety valve. What information does this give?
9. Calculate the weight of ball for a 6″ safety valve. Weight of stem, etc., is 8 lbs. Pressure in valve 100 lbs. per sq.in. Length of lever to 100 lbs. mark is 50″ from fulcrum. Depth of lever at fulcrum is 2″. At 100 lbs. mark it is 1.5″. The lever is $\frac{5}{8}$″ thick and made of W. I. The steam pressure acts on the lever $3\frac{1}{2}$″ from the fulcrum.
10. Calculate the diam. of fulcrum pin in question 9.
11. The bonnet opening in a globe valve is 7.4″ diameter. The bonnet is fastened to the shell by 8 $\frac{3}{4}$″ bolts. Find the max. stress in a bolt when the pressure in the valve is 150 lbs. per sq.in.
12. What is a pet cock? A stop cock? Sketch them both.
13. Explain the difference between a valve with flanged ends and one with tapped ends.
14. What is an angle valve? A globe valve? A safety valve?
15. Sketch the general outline of an angle valve with tapped ends.
16. Explain the forces acting on the stem of a globe valve. How do you arrive at the proper diameter of the stem?
17. Find the force necessary to use on the hand wheel of a globe valve necessary to force the disc against the seat with a total pressure 75 lbs. greater than a given pressure of steam in the valve.
18. If the stress due to screwing up is 15% more than the direct stress due to direct load on a valve stem, calculate the outside diameter of a stem for a 6″ valve when the thread is $\frac{1}{4}$″ pitch and the stress per sq.in. on the stem is not to exceed 6000 lbs. (Acme thread.)
19. Calculate the efficiency of the screw on a valve stem $1\frac{1}{4}$″ diam., $\frac{1}{4}$″ pitch when $\mu = .2$. $\quad e = \dfrac{\tan \alpha\,(1 - \mu \tan \alpha)}{\tan \alpha + \mu}$.
20. Sketch either a bonnet or a shell for a globe valve and indicate the finished surfaces by finish marks.
21. Calculate the weight of shell or bonnet of the valve sketch accompanying this.

INDEX

A

Abbreviations, 32
Acme thread, 73
Addendum, 215
  " circles, 215
Air cocks, 271
A. L. A. M thread, 71
  " bolts and nuts, 71
  " " Table 14, 17
Alphabets, 35, 36, 37
Angle irons, 50
  " valves, 279
Angles on bevel gears, 251
Architects, scale, 23, 24
Arcs, radius of, 30
Arms, bevel gear, 248
  " pulleys, 205
  " spur gears, 223
  " worm wheel, 261
Arrows, pencil, 25
  " ink, 42
Assembled drawings, 21

B

Backlash, 216
Ball bearings, 137
  " races, 140
Beams, rolled, 50
Bearing box, 120
  " " formulae, 120
  " " scale, 123
  " pressure, 125
  " " Table, 16, 19
Bearings, 119
Belts, leather, 199
Bevel gears, 244
  " gear angle, 253
  " " arms, 248
  " " blank, 251
  " " dimensions, 254
  " " drawing, 245
Bevel gear H. P., 254
  " " hub, 248
  " " layout, 245
  " " pinion, 247
  " " rim, 248
  " " shop drawings, 251
  " " teeth strength, 253
Bill of material, 34
Blank, bevel gear, 251
Blocking in, 24
Blue printing, 41
Bolts, 74
  " and nuts, shading, 40
  " coupling, 88
  " hex. hd., sq. hd., 81
  " lists, 79
  " mfs. stand., 79
  " miscellaneous, 79
  " rounding ends, 81
  " scale U. S. St., 79
  " strength, 75
  " stud, 79
  " tap, 79
  " Tee hd., 88
  " U. S. St., 79
Borders, 33
Brasses, 123
Breaks, conventional, 26
British Asso. thread, 70
Bushing, pipe, 57
Button hd. cap screw, 80
Buttress thread, 74

C

Caps, pipe, 56
Cap screw, 79
  " " slots, 79
Cast-iron flanges, 55
  " fittings, 57
Center lines ink, 42
  " " pencil, 23

Center lines principal, 23
" " supplementary, 24
Chamfer, 87
" curves, 87
Channels, 50
Checking, 44
Check valves, 268
Circle drawings, 30
" shading, 39
Circular pitch, 216
" " calc., 236
Claw coupling, 110
Cleaning tracings, 43
Clearance, gear teeth, 216
Cocks, 279
Coefficients of friction, 125, 137, 260
" Table 17, 19
Cone pulleys, 209
Conn.-rods, 173
" crank end, 176
" gasolene eng., 176
" intersec., 185
" lengths, 173
" sections, 173
" strap end, 183
Conventional thread, 75
Conversion table, metric, 2
Cotters, 102
" Spring, Table 12, 16
Cottered bolt, 90
" joint, 101
Coupling bolts, 88
" pipe, 56
" pipe, table 8, 13
" shaft, 106
" shaft formulae, 107
Crank pin, 189, 190
Cranks, 189
" web, 191
Crosshead, engine, 161
" pins, 164
" " forces, 162
" slipper, 165, 168
" turned, 165
Crowning of pulleys, 204
Curve centers, 30
Curves, 24
Cutting gear teeth, 222
Cycloidal teeth, 219
Cylinders, shading of, 39

D

Decimal equivalents, 1
Dedendum, 215
Depth of tapped hole, 80
Detail drawings, 21
Diagrams, gear, 237, 238
" gear speed, 235
Diameters, to give, 30
" of pipe, 54
Diametral pitch, 216
Dimensioning, 29, 42
Dimension, how to, 27, 29
" full size, 26
" lines, 25
" numerals, 27
Dimensions, how expressed, 29
" " placed, 29
" of, holes, 30
" overall, 29, 44
" reduced, 26
" special, 29
Directions, end of each chapter
Draughtsman, name of, 33
Drawings, 21
" ink lines, 44
" instruments, 8
" layout, 24
" numbering, 33
" paper, 23
Driving force, belts, 202
Drop hangers, 128

E

Eccentric oiling, 194
" rod, 194
" strap, 193
Eccentrics, 192
Efficiency, spur gears, 229
Equivalents, decimal, 1
Erase, how to, 44
Erasing, 43
" ink, 43
" from tracing, 44
" shield, 8
Extension lines, ink, 44
Eye bolts, 89, 90

F

Face of spur gear, 231
Factors of safety, 20
" " Table 20, 20
Fastenings, 45
Feathers on gear arms, 224
Figures, 27
Finish marks, 33
Fillister hd. cap screw, 80

Flanged unions, 62
Flanges, pipe, Table 11, 15
Flat hd. cap screws, 80
Flexible coupling, 109
Flow in pipes, 62
Follower plate, 151
Footstep bearing, 119
Formulae, couplings, 109
" bevel gears, 251
Foundation bolts, 89
Fractions, how made, 29
" height of, 29
French hd. cap screw, 79
Friction of bearings, 125

G

Gas engine pistons, 156
Gasoline eng. pistons, 157
" to clean trac., 43
Gearing, 215
Gears, arms of, 226
" arm calcul., 226
" bevel, 244
" spur, 215, 239
" teeth formulae, 221
" worm, 258
Gib and key, 102
Gib head key, 99
Globe valves, 283
Grip of bolts, 88
Guide bars, pressure on, 163
Grant's Odontograph, 220

H

Half size scale, 23
Hanger, 127
Height of figures, 29
" " fractions, 29
" " letters, 36
Helix, 67
Hexagon construction, 82
Hex. hd. bolt, 83
" " " cap screw, 81
" nut, 82
Hob for worm wheel, 263
Holes, centers of, 31
" dimensions of, 31
" tapped, 30
Horse-power belts, 202
" gear, 236
Hub, bevel gear, 249
" pulley, 205
" spur gear, 249

I

I-Beams, 50
Information, useful, 1
Ink, 42
Inking arcs, 42
" order of, 42
Instruments, drawing, iv
International St. Thd., 70
Involute gear teeth, 217

J

Journals, 119
" area, 119
" pressures, 19

K

Keys, 97
" sunk, 99
" Woodruff, 101
Keyway, 99
" cutting, 100
" gib head, 99

L

Lag screws, 82
Layout of drawings, 24
Lead of worm, 258
Length, bolts and screws, 88
Lettering, 34, 36
" pens, 36
" titles, 33
Lewis bolt, 89
" formulae, 231
Lifting eye bolts, 89, 90
Lines, 42
" angle of sec., 25
" border, 33
" dimension, 25
" dimen. ink, 42
" extension, 42
" guide, 38
" how to draw ink, 43
" section, 26, 40
Locknut, 91
" pipe, 56
Logarithm Tables, 3

M

Machine screws, 79
Making drawings, 21
" letters, 36
Marks, finish, 33

Material bill, 84
" strength, Table 19, 20
Metric Table, 2
Mfgs. Stand. Bolt hd., 79
Mod Sq. thread, 72
Multiple threads, 75

N

Name of draughtsman, 33
Nipples, pipe, 56
Notes, abbreviations, 32
" on drawings, 31
Numerals, 29
" height of, 29
Nut, locking, 91
Nuts hex. and sq., 87
" shading of, 40
" U. S. St., 85

O

Odontograph Table, 220
Oil-cups, 44
Order of making drawing, 21
Overall dimensions, 29, 44

P

Paper, drawing, 23
Pencils, 25
" points, 25
Penn nut, 91
Pens, 43
Pillow block, 123
Pin key, 101
Pinions, 223
Pins, crosshead, 164
Pipe caps, 56
" couplings, 55
" fittings, C. I., 56
" " scale, 59
" " Table 8, 13
" " Table 9, 14
" flanges, 55
" " Table, 11, 15
" for water and steam, 54
" friction, 63, 64
" nipples, 56
" plugs, 56
" tables, 55, 61
" thread, 56
" unions, 60
" W. I. for water or gas, 14
Pistons, C. I., 153
" cast steel, 153
" rings, 150
" rods, 153
" " calculations, 154
Pitch, calculations, 221
" circle, 222
" circular, 215
" diametral, 217
" of gears, 217
" of rivets, 51
" of thread, 68
" of worm, 258
Plates, see end of Index
Plugs pipe fittings, 56
Plunger, 150
Post hangers, 130
Powder, talcum, 42
Preparing tracing, 41
Printing on drawings, 34
" pencils, 38
" pens, 43
" titles, 33
Pull on belts, 203
Pulleys, 199
" arms, 205
" calculations, 199
" cone, 209
" diameters, 204
" face, 204
" hub, 205
" rim, 205
" speeds, 202

R

Rag bolt, 81
Radii of arcs, 30
Ramsbottom rings, 150
Reading figures, 29
Reduced dimensions, 23
" scales, 23
Reproducing drawings, 40
Revolutions of worm, 260
Rim, bevel gear, 248
" pulley, 205
" spur gear, 224
" worm wheel, 261
Ring oiled bearing, 136
Rivet scale, 46
Riveted joints, 46
Rivets, 45
Rolled sections, 50
" " Table 4, 12

Roller bearings, 141
Round hd. cap sc., 79

S

Safety valves, 271
Sandpaper, 8
Scale, changed, 23
" of drawings, 23
Scales, 23
" architects, 23
" fittings, 58
" for bearing boxes, 123
" for bearings, 123
" for bolts, 89
" for keys, 100, 101
" for pipes, 58
" reduced, 23
" rivets, 45
Screw threads, 67
Screws, cap, 79
" dimensions, 81
" lag, 82
" machine, 79
" set, 93
" slotted hd., 79
" sq. hd. cap, 81
" wood, 83
Section, half, 23
" lining, 36, 40
" " " lines U. S. Navy, 26
" views, 25
Set screws, 92
Seward's gear chart, 237 (folder)
Shade lines, 39
Shading drawings, 39
" bolts and nuts, 40
" circles, 39
Shaft calculations, 104
" couplings, 106
" supports, 143
" worm wheel, 261
Slipper crosshead, 165
Slots in screw hds., 79
Soapstone, use of, 43
Speed of gear teeth, 233
Special dimensions, 30
Split cotter pin, Table 12, 16
Spoken dimens., 29
Sponge eraser, 43
Springs, 76
Spring washer, 92
Spur gears, 215
Spur gear arms, 222, 229
" " hub, 224
" " rim, 224
" " teeth, 216
" " train, 238
Square heads, 81
" hd. cap screw, 81
" nuts, 87
" thread, 72
Stages of drawing, 221
" " construction, 25
" " finishing, 25
Stop cock, 278
Strap end, conn. rod, 183
" eccentric, 192
Strength of bolts, 94
" " gear teeth, 230
" " material, 20
" " thread, 71
Stretched tracings, 41
Stud bolt, 83
Stuffing boxes, 112
" " scale, 113
Sunk keys, 99
Swing eye bolts, 89
Synopsis of making drawings, 21, 22

T

Tables:
" cap screws, 9
" cast-iron pipe flanges, 15
" comparative areas, 11
" " " " " in elbows, 64
" friction of water, 63
" Grant's Odontograph, 220
" Mfg. Stand. bolts, 9
" oil cups, 16
" pipe fittings, 13
" rolled beam sections, 12
" Table 13, 16
" taper pins, 101
" threads Internat. Syst., 10
" " metric syst., 10
" " per inch, 9
" unions, 61
" U. S. St. bolts, 9
" washers, 92, 93
" W. I. pipes, 54
Tap bolt, 84
Tapped holes, 79
Tee-head bolts, 88
Teeth outlines, 217
Test questions, end of book

Threads, A. L. A. M., 71
" B. A., 70
" buttress, 74
" comparative areas at root, 11
" forms of, 68
" internat. syst., Table 2, 11
" Internat St., 70
" metric syst., 10
" multiple, 75
" per inch, 71
" " " Table 1, 9
" pipe, 71
" " per inch, 13
" right and left, 75
" single, double, 75
" sq. and mod. sq., 72
" U. S. standard, 69
" V, 68
" Whitworth, 69
Through bolts, 85
Titles, composition of, 33, 38
" where place, 33
Tools for drawing, list of, 8
Tooth factors, 231
Tracing, 40
" cloth, 41
" " how placed, 42
" order of making lines, 42
Triangular scale, 23
Trunk piston, 150, 157

U

Union, pipe, 62
Universal joint coupling, 109
U. S. Standard bolts, 85
" " Navy sections, 26
" " nuts, 85
" " thread, 70

V

Valves, 268
" angle, 283
" check, 270
Valves, globe, 283
" safety, 271
Views on drawing, 21
" number of, 22
" placing of, 22
V thread, 68

W

Wall bracket, 143
Washer, spring, 92
Washers, cut, 92
Weight of pulley, 210
" " spur gear, 229
" " substances, 20
Whitworth thread, 69
Wing nuts, 89
Woodruff keys, 101
" " Table 15, 18
Wood screws, 83
Working drawing, 21
" " making of, 21
Worm and worm wheel, 258
" and wheel H. P., 261
" helix angle, 260
" length and diam., 259
" velocity, 260
" wheel diam., 261
" " " drawing, 262, 263
" wheel rim, 261
" " strength, 261
" " shaft, 261
" " teeth, 261
" " threads, 258
" " and wheel vel. ratio, 258
" " " efficiency, 259
Wrist pin, 164
Writing pens, 43
Wrought iron pipes, 54
" " Table, 14

PLATES

Alphabets, 37
Titles, 35
" sizes of in U. S. M. A., 35

3657